PROPRIETARY RIGHTS of COMPUTER HARDWARE INC. are involved in this subject matter, and all manufacturing, reproduction, use and sales rights pertaining to such subject matter are expressly reserved. It is submitted in confidence for a specified purpose, and the recipient by accepting this material agrees that this material will not be used, copied or reproduced in whole or in part nor its contents revealed in any manner or to any person except to meet the purpose for which it was delivered.

TABLE OF CONTENTS

TITLE	CAGE POSITION (IF FIXED)	DOCUMENT NUMBER
A. CPU CAGE		
REGISTER 0-7	A8	SC-2077
REGISTER 8-15	A9	SC-2080
REGISTER ARITH.	A10	SC-2123
OP INDEX REG. 0-7	A11	SC-2151
OP INDEX REG. 8-15	A12	SC-2148
GEN. ARITH. CTL.	A13	SC-2129
INTERFACE REC.	A14	SC-2136
ARITH. REG. CTL.	A15	SC-2133
DATA BUSS. CTL.	A16	SC-2145
OP DECODE & MACH. CTL.	A17	SC-2142
INTERFACE DRIVER	A18	SC-2139
F/P CONTROL	A19	SC-2154
INTERRUPT CTL.	A20	SC-2157
SIGNAL LIST-BACK PLANE	-	SA-2342
B. MEMORY CAGE		
SIGNAL LIST-INTERCONNECT CABLE		SA-2394
CORE MODULE ELECTRONICS		SHEET 1 & 2
CORE MODULE MAGNETICS		SHEET 1 & 2
CORE MODULE BLOCK DIAGRAM		FIGURE 1
CORE MODULE TIMING DIAGRAM		FIGURE 2
CORE MODULE CTL. & TIMING DIAGRAM		FIGURE 3
CORE MODULE SENSE & INHIBIT CIRCUITS		FIGURE 4
CORE MODULE X DRIVE CIRCUIT		FIGURE 5
CORE MODULE Y DRIVE CIRCUIT		FIGURE 6

TABLE OF CONTENTS

TITLE	CAGE POSITION (IF FIXED)	DOCUMENT NUMBER
C. FRONT PANEL		
SCHEMATIC DIAGRAM		SC-2111
D. AC & DC POWER DISTRIBUTION		
AC POWER DISTRIBUTION		SA-3003
DC POWER DISTRIBUTION		WD-2291
DC POWER - 1442		SC-2277
COM'L SUPPLY SCHEMATICS:		
SPS 15/30		SA-1826
SPS 40 - 12 & - 15		SA-2235
SPS 120 - 15		SA-2163
SPS 250 - 5		SA-2340
XE 30 - 5		
XE 15 - 3		SC-1385
E. I/O CAGE		
COMMON ELEC. W/I/F TERM	B1	SC-2047
CAGE TERMINATOR	-	SC-2009
SIGNAL LIST - CPU I/F CABLE		SA-2325

CPU CAGE

NOTES:
1- DELETED

ASSEMBLY REVISION D... (REF)		
REV. LTR.	DESCRIPTION	REASON
B	ADDED IC IN POS 17	IMPROVE OPERATION
C	ELIMINATED BUSS BARS. NO. OF .01 ALT CAPACITORS REDUCED TO 49.	REFLECT USE OF MULTILAYER PC CARD

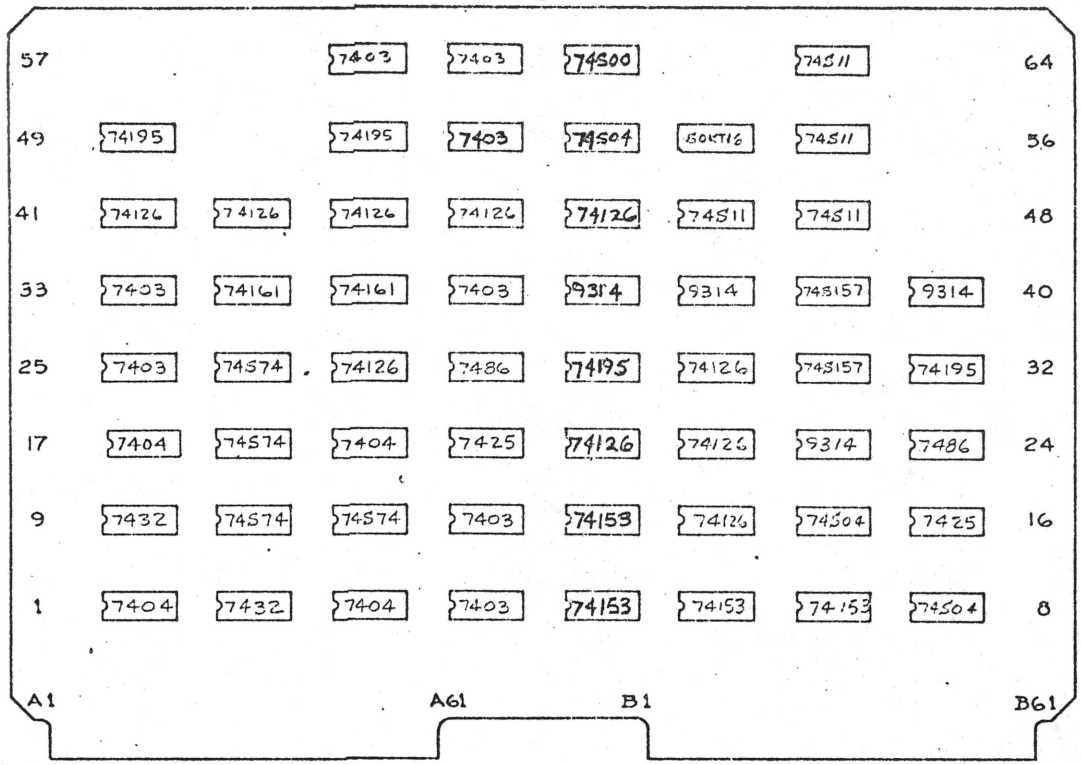

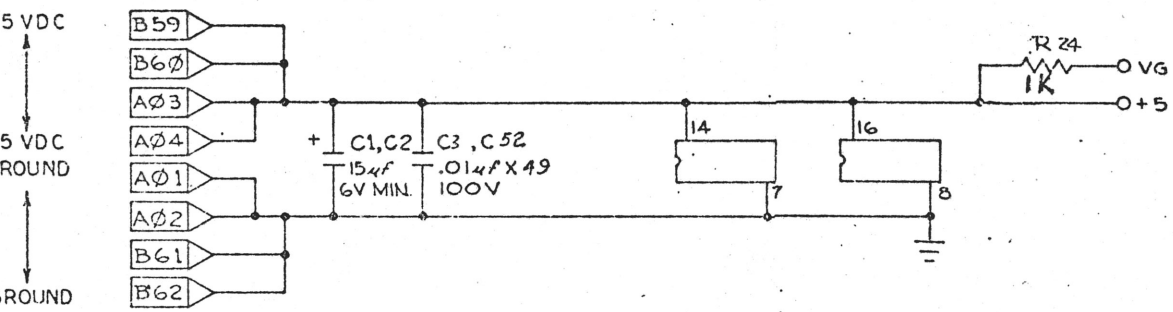

CONFIGURATION TABLE		
SC-2077	PC-2078	AC-2079
REV NC	REV NC	REV NC
NC	NC	A
A	NC	B
B	A	C

LAST USED TABLE	
CODE	REF DES.
BM	
	R 24
	C52

FILE NUMBER

QTY REQD	PART OR FILE NUMBER	NOMENCLATURE	MFG PART NO OR MATERIAL	MFG NAME OR SPECIFICATION	ITEM NO

LIST OF MATERIALS

THIS PRINT CONTAINS PROPRIETARY INFORMATION. REPRODUCTION OF THIS PRINT OR ANY INFORMATION CONTAINED HEREIN OR MANUFACTURE OF ANY ARTICLE HEREFROM FOR DISCLOSURE TO OTHERS IS FORBIDDEN EXCEPT BY SPECIFIC WRITTEN PERMISSION FROM COMPUTER HARDWARE INC

UNLESS OTHERWISE SPECIFIED DIMENSIONS ARE IN INCHES
DIMENSION TOLERANCES
ANGULAR DIMENSION ±
DECIMAL 2 PLACE ±
DECIMAL 3 PLACE ±
BREAK SHARP EDGES MAX
INSIDE CORNERS MAX
ALL MACHINE SURFACES
CHAMFER ALL THREADS
DO NOT SCALE THIS PRINT

LETTER	DRN	CHK	DATE
C	[illegible]	[illegible]	11-5-75

CHANGE RECORD NO 2077

TITLE: REGISTER Ø-7-2131

COMPUTER HARDWARE INC

DRAWN: DON 08-06-74 CHECKED: [illegible]
DESIGN: ELR
SCALE:
SC 2077 SHEET 1 OF 8 B1

SC 2077 B

MC 2096

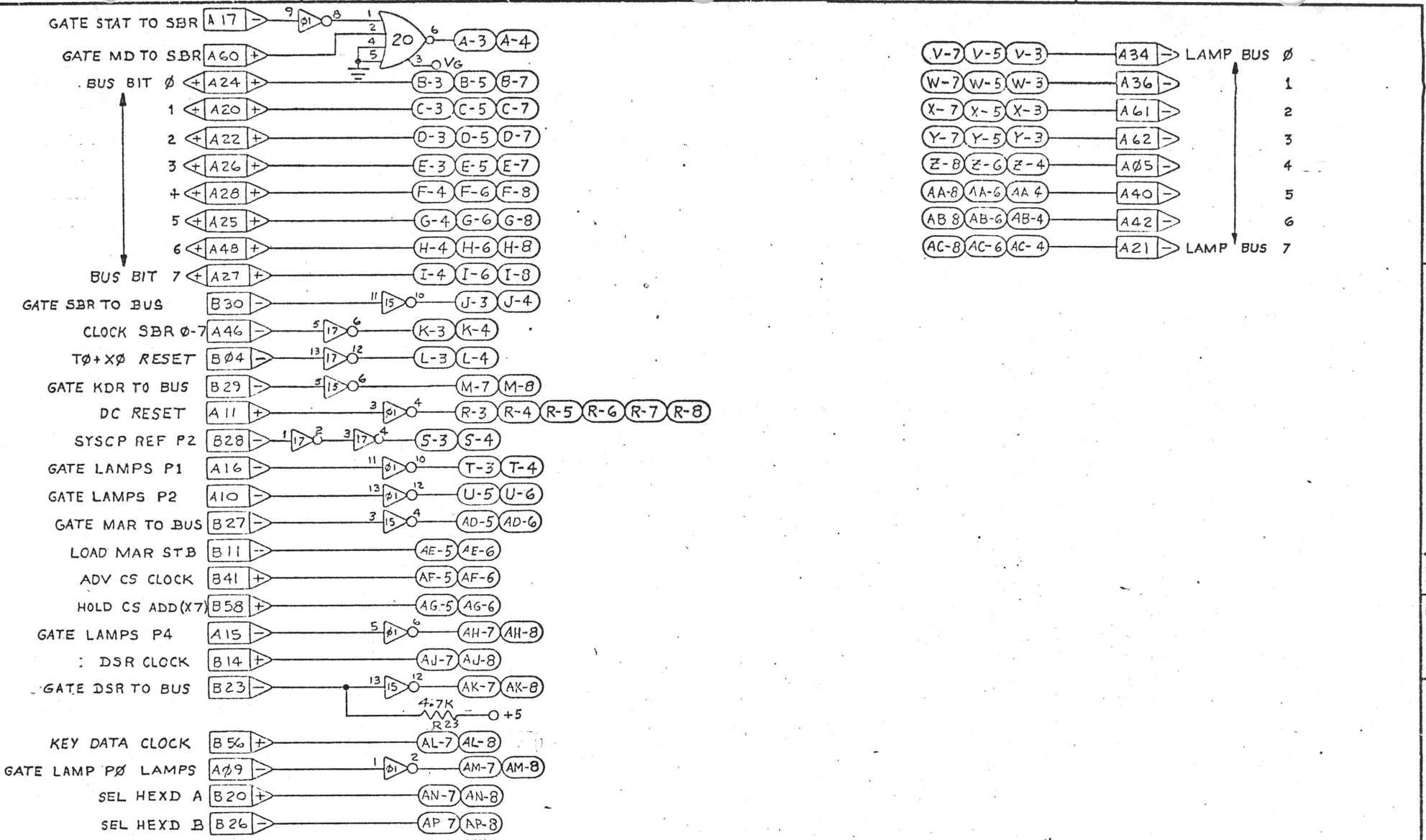

SC 2077

COMPUTER HARDWARE INC

TYPE-SIZE	DWG NO	REV LET
SC	2077	B1

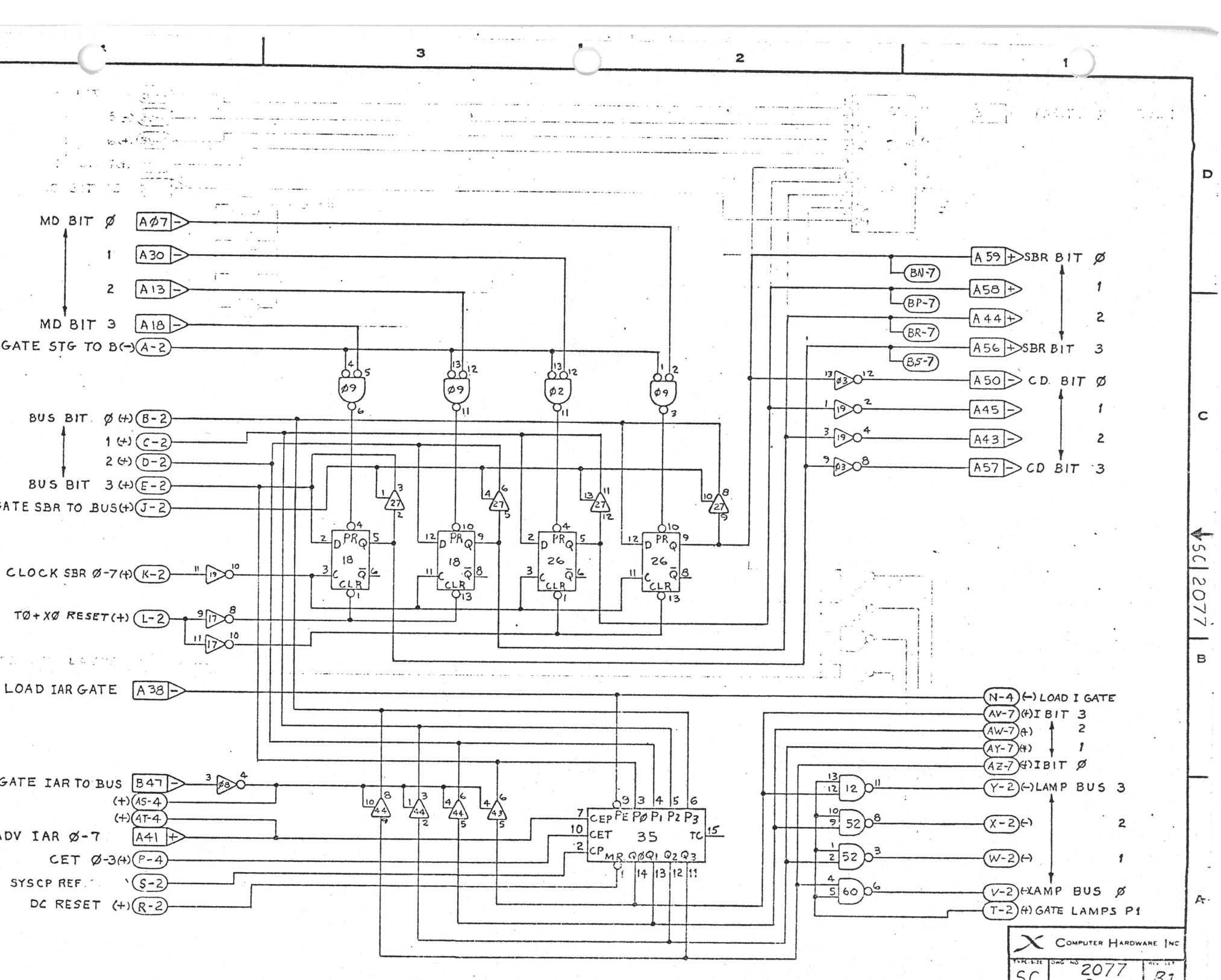
MD BIT Ø
1
2
MD BIT 3
GATE STG TO B(-)
BUS BIT Ø (+)
1 (+)
2 (+)
BUS BIT 3 (+)
GATE SBR TO BUS(+)
CLOCK SBR Ø-7(+)
TØ+XØ RESET(+)
LOAD IAR GATE
GATE IAR TO BUS
(+)
(+)
ADV IAR Ø-7
CET Ø-3(+)
SYSCP REF
DC RESET (+)
SBR BIT Ø
1
2
SBR BIT 3
CD BIT Ø
1
2
CD BIT 3
LOAD I GATE
I BIT 3
2
1
I BIT Ø
LAMP BUS 3
2
1
LAMP BUS Ø
GATE LAMPS P1
COMPUTER HARDWARE INC
2077
B1

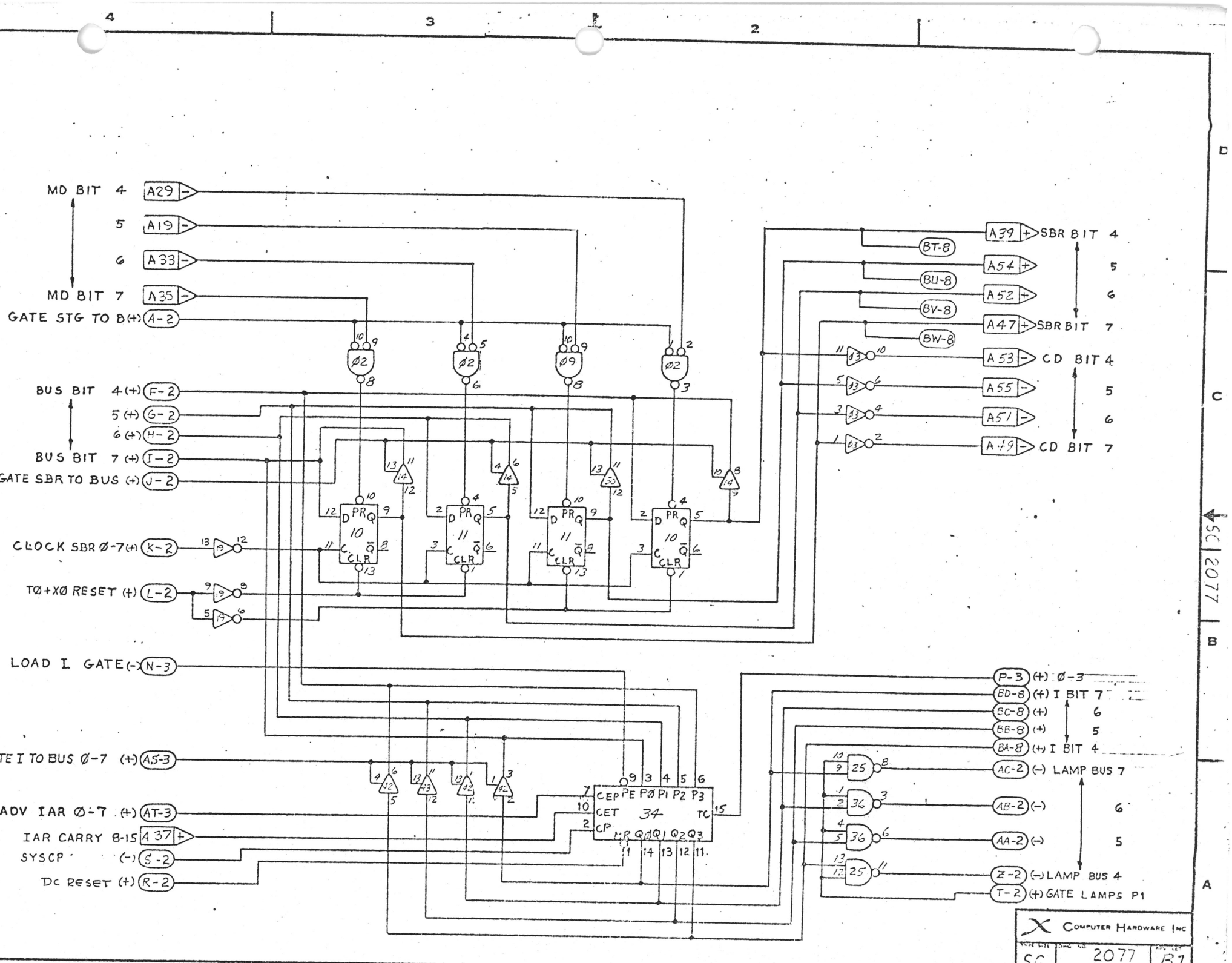
MD BIT 4
5
6
MD BIT 7
GATE STG TO B (+)
BUS BIT 4 (+)
5 (+)
6 (+)
BUS BIT 7 (+)
GATE SBR TO BUS (+)
CLOCK SBR Ø-7 (+)
TØ+XØ RESET (+)
LOAD I GATE (-)
TE I TO BUS Ø-7 (+)
ADV IAR Ø-7 (+)
IAR CARRY 8-15
SYSCP (-)
DC RESET (+)
SBR BIT 4
5
6
SBR BIT 7
CD BIT 4
5
6
CD BIT 7
(+) Ø-3
(+) I BIT 7
6
5
(+) I BIT 4
(-) LAMP BUS 7
6
5
(-) LAMP BUS 4
(+) GATE LAMPS P1
COMPUTER HARDWARE INC
2077

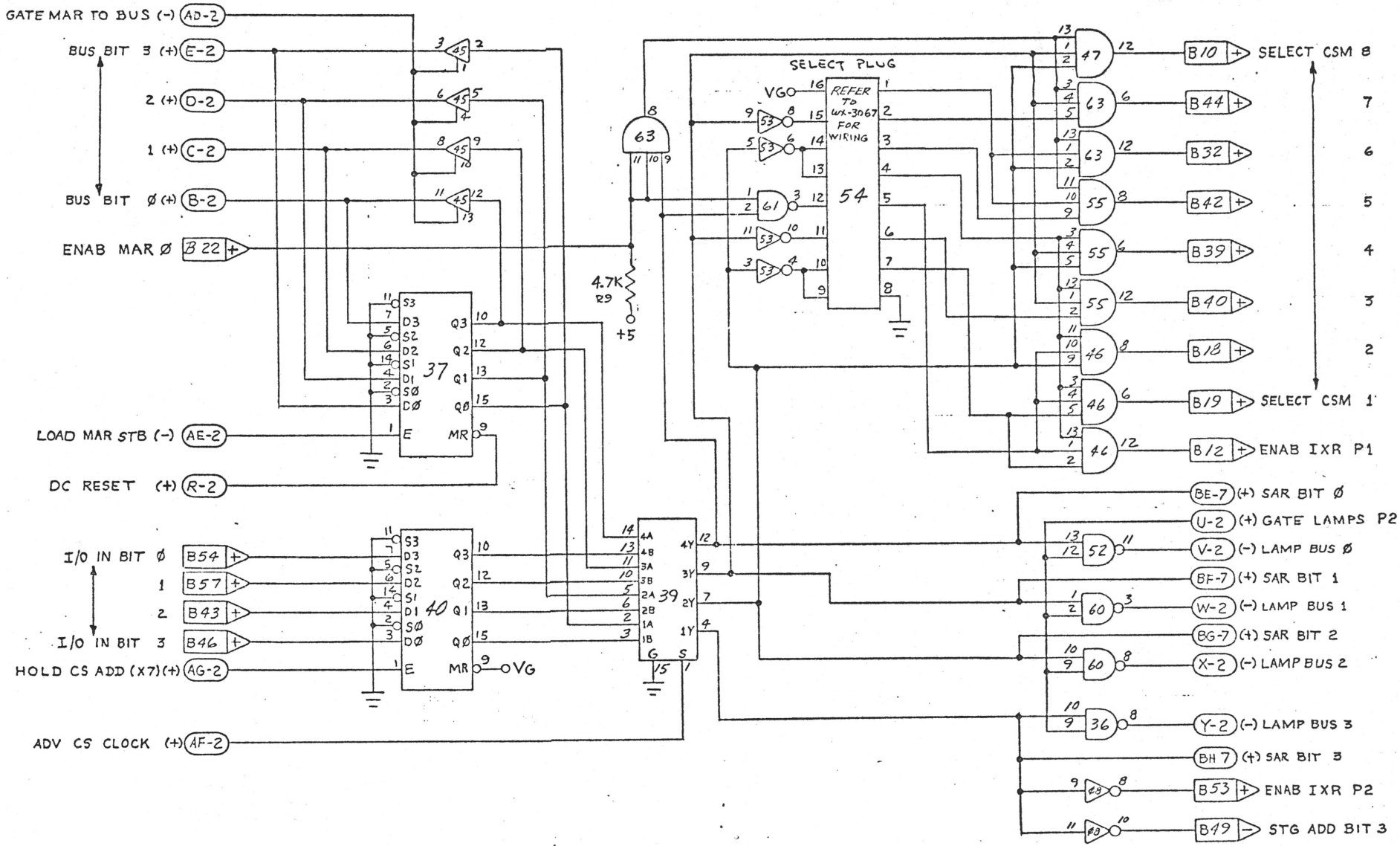

COMPUTER HARDWARE INC

SIZE	DWG NO	REV
SC	2077	B1

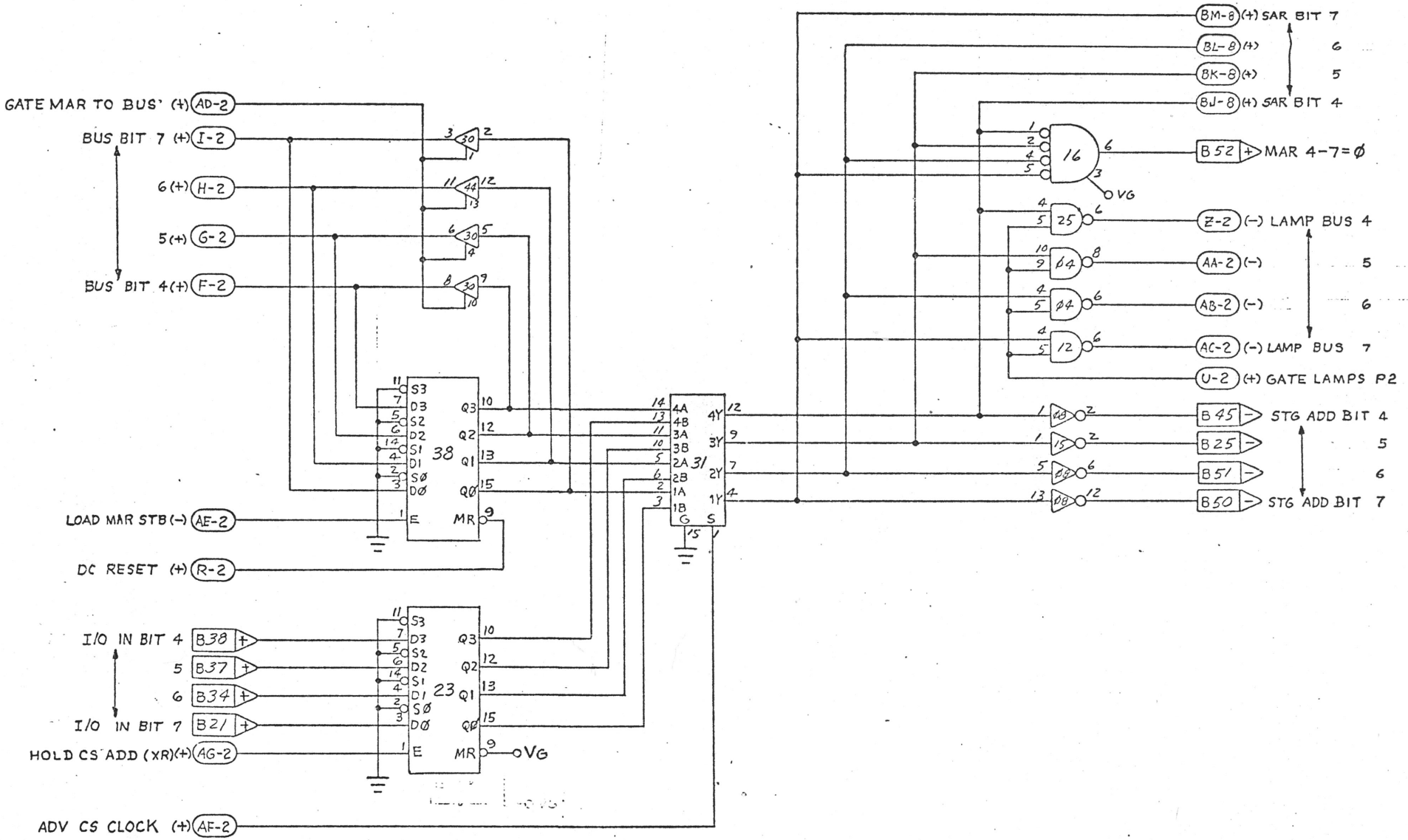

COMPUTER HARDWARE INC			
SIZE SC	DWG NO 2077	REV B7	

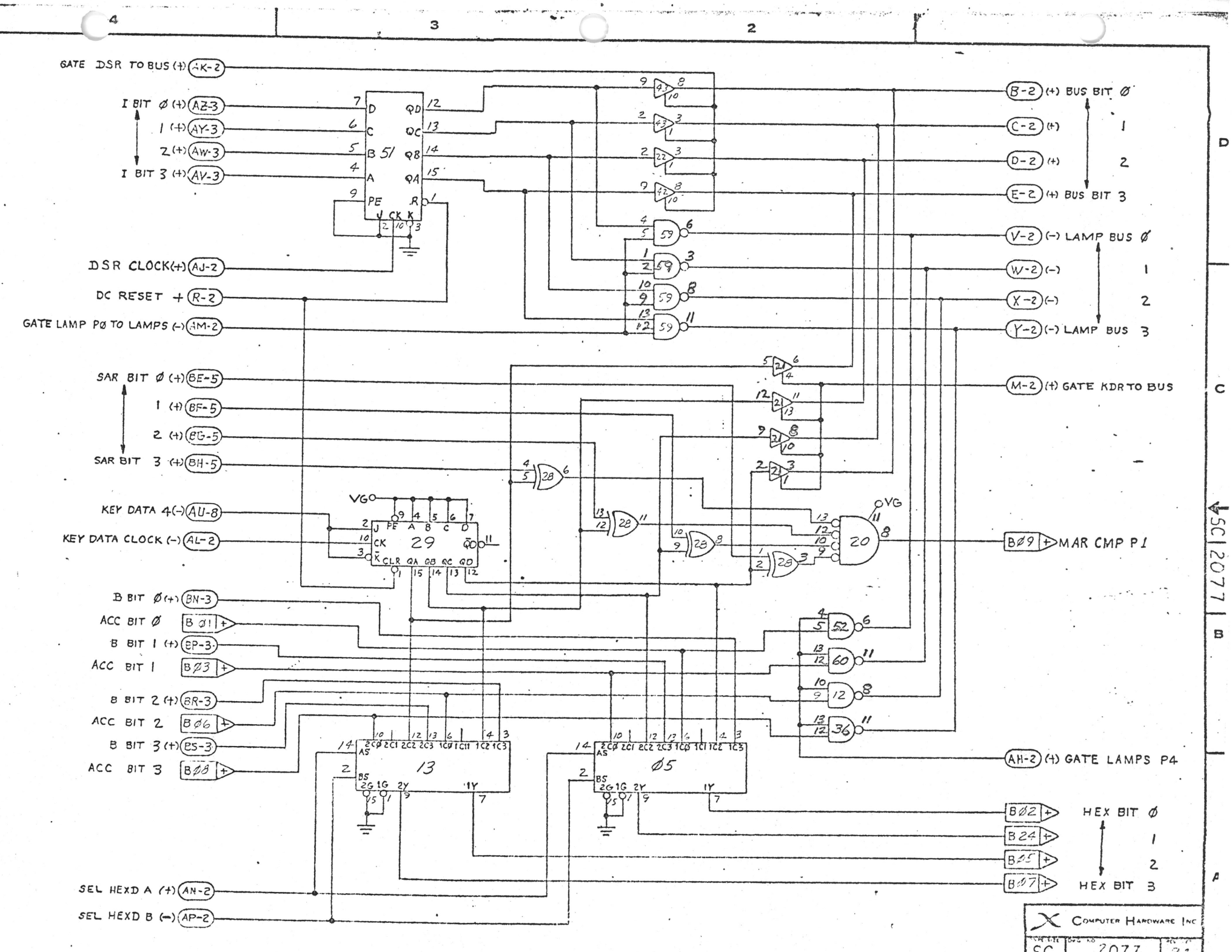

GATE DSR TO BUS (+) AK-2
I BIT Ø (+) AZ-3
1 (+) AY-3
2 (+) AW-3
I BIT 3 (+) AV-3
DSR CLOCK (+) AJ-2
DC RESET + R-2
GATE LAMP PØ TO LAMPS (-) AM-2
SAR BIT Ø (+) BE-5
1 (+) BF-5
2 (+) BG-5
SAR BIT 3 (+) BH-5
KEY DATA 4 (-) AU-8
KEY DATA CLOCK (-) AL-2
B BIT Ø (+) BN-3
ACC BIT Ø BØ1
B BIT 1 (+) BP-3
ACC BIT 1 BØ3
B BIT 2 (+) BR-3
ACC BIT 2 BØ6
B BIT 3 (+) BS-3
ACC BIT 3 BØ8
SEL HEXD A (+) AN-2
SEL HEXD B (-) AP-2
B-2 (+) BUS BIT Ø
C-2 (+) 1
D-2 (+) 2
E-2 (+) BUS BIT 3
V-2 (-) LAMP BUS Ø
W-2 (-) 1
X-2 (-) 2
Y-2 (-) LAMP BUS 3
M-2 (+) GATE KDR TO BUS
BØ9 MAR CMP P1
AH-2 (+) GATE LAMPS P4
BØ2 HEX BIT Ø
B24 1
BØ5 2
BØ7 HEX BIT 3
VG
COMPUTER HARDWARE INC
SC 2077

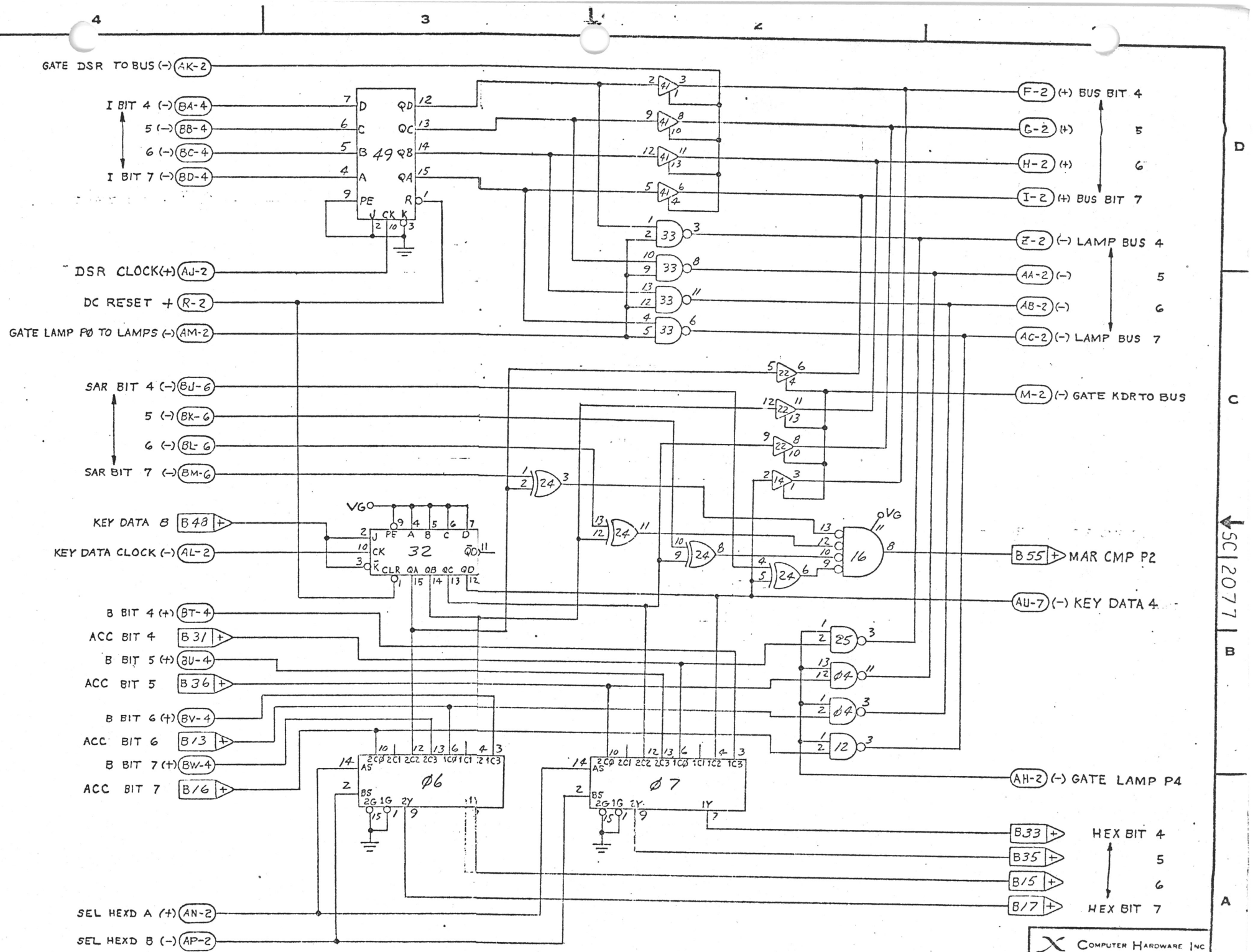
GATE DSR TO BUS (-) AK-2
I BIT 4 (-) BA-4
5 (-) BB-4
6 (-) BC-4
I BIT 7 (-) BD-4
DSR CLOCK (+) AJ-2
DC RESET + R-2
GATE LAMP PØ TO LAMPS (-) AM-2
SAR BIT 4 (-) BJ-6
5 (-) BK-6
6 (-) BL-6
SAR BIT 7 (-) BM-6
KEY DATA 8 B48 +
KEY DATA CLOCK (-) AL-2
B BIT 4 (+) BT-4
ACC BIT 4 B31 +
B BIT 5 (+) BU-4
ACC BIT 5 B36 +
B BIT 6 (+) BV-4
ACC BIT 6 B13 +
B BIT 7 (+) BW-4
ACC BIT 7 B16 +
SEL HEXD A (+) AN-2
SEL HEXD B (-) AP-2
49
32
Ø6
Ø7
F-2 (+) BUS BIT 4
G-2 (+) 5
H-2 (+) 6
I-2 (+) BUS BIT 7
Z-2 (-) LAMP BUS 4
AA-2 (-) 5
AB-2 (-) 6
AC-2 (-) LAMP BUS 7
M-2 (-) GATE KDR TO BUS
B55 + MAR CMP P2
AU-7 (-) KEY DATA 4
AH-2 (-) GATE LAMP P4
B33 + HEX BIT 4
B35 + 5
B15 + 6
B17 + HEX BIT 7
COMPUTER HARDWARE INC
SC 2077 /37

NOTES:
1-DELETED.

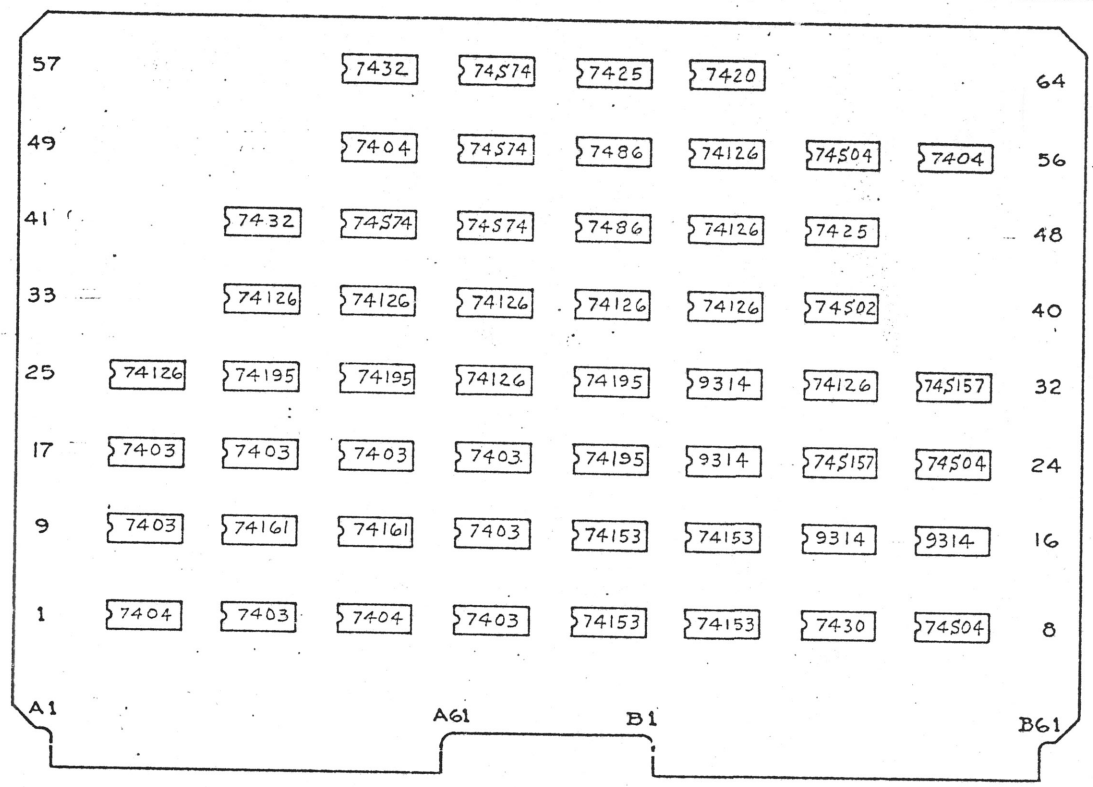

ASSEMBLY REVISION DATA (REF)

REV. LTR.	DESCRIPTION	REASON
C	REMOVED IC'S IN POS 50 & 57 AND ADDED IC IN POS 56	TO IMPROVE OPERATION
D	CHANGED TO MULTILAYER PC CARD	TO IMPROVE SIG & GND CHARACTERISTICS

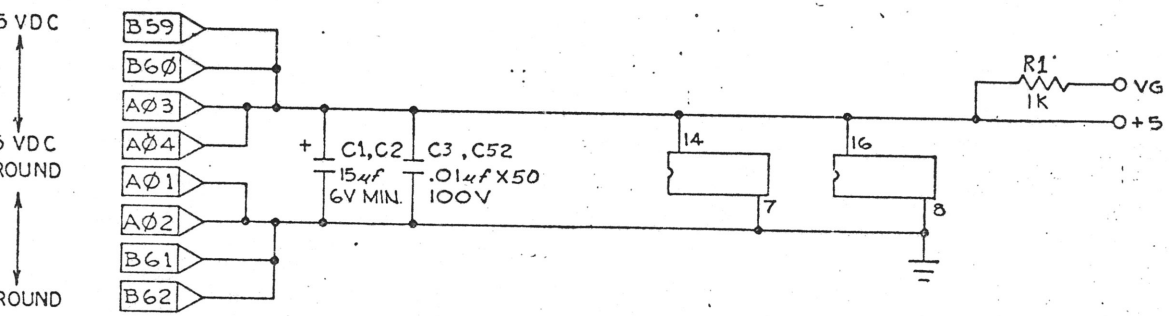

CONFIGURATION TABLE

SCHEMATIC	REV	PC	REV	ASSY	REV
SC-2080	NC	PC-2081	NC	AC-2082	NC
SC-2080	NC	↑	NC	↑	A
SC-2080	A	↓	NC	↓	B
SC-2080	B	PC-2081	NC	AC-2082	C
SC-2080	C	PC-2081	A	AC-2082	D

LAST USED TABLE

CODE	REF DES.
CC	R1
	C68

FILE NUMBER

QTY REQD	PART OR FILE NUMBER	NOMENCLATURE	MFG PART NO. OR MATERIAL	MFG NAME OR SPECIFICATION	ITEM NO

LIST OF MATERIALS

THIS PRINT CONTAINS PROPRIETARY INFORMATION. REPRODUCTION OF THIS PRINT OR ANY INFORMATION CONTAINED HEREIN OR MANUFACTURE OF ANY ARTICLE HEREFROM FOR DISCLOSURE TO OTHERS, IS FORBIDDEN EXCEPT BY SPECIFIC WRITTEN PERMISSION FROM COMPUTER HARDWARE INC

UNLESS OTHERWISE SPECIFIED DIMENSIONS ARE IN INCHES
DIMENSION TOLERANCES
ANGULAR DIMENSION ± 1°
DECIMAL 2 PLACE ± .020
DECIMAL 3 PLACE ± .010
BREAK SHARP EDGES MAX
INSIDE CORNERS MAX
ALL MACHINE SURFACES √
CHAMFER ALL THREADS

TITLE: REGISTER, 8-15-2131

X COMPUTER HARDWARE INC.
TCW 11-8-74

DRAWN: SANDERS
CHECKED:
DESIGN:
TYPE-SIZE
DWG NO
REV LET

LETTER	DRN	CHK	DATE
C	HS		

SC 2080

2096

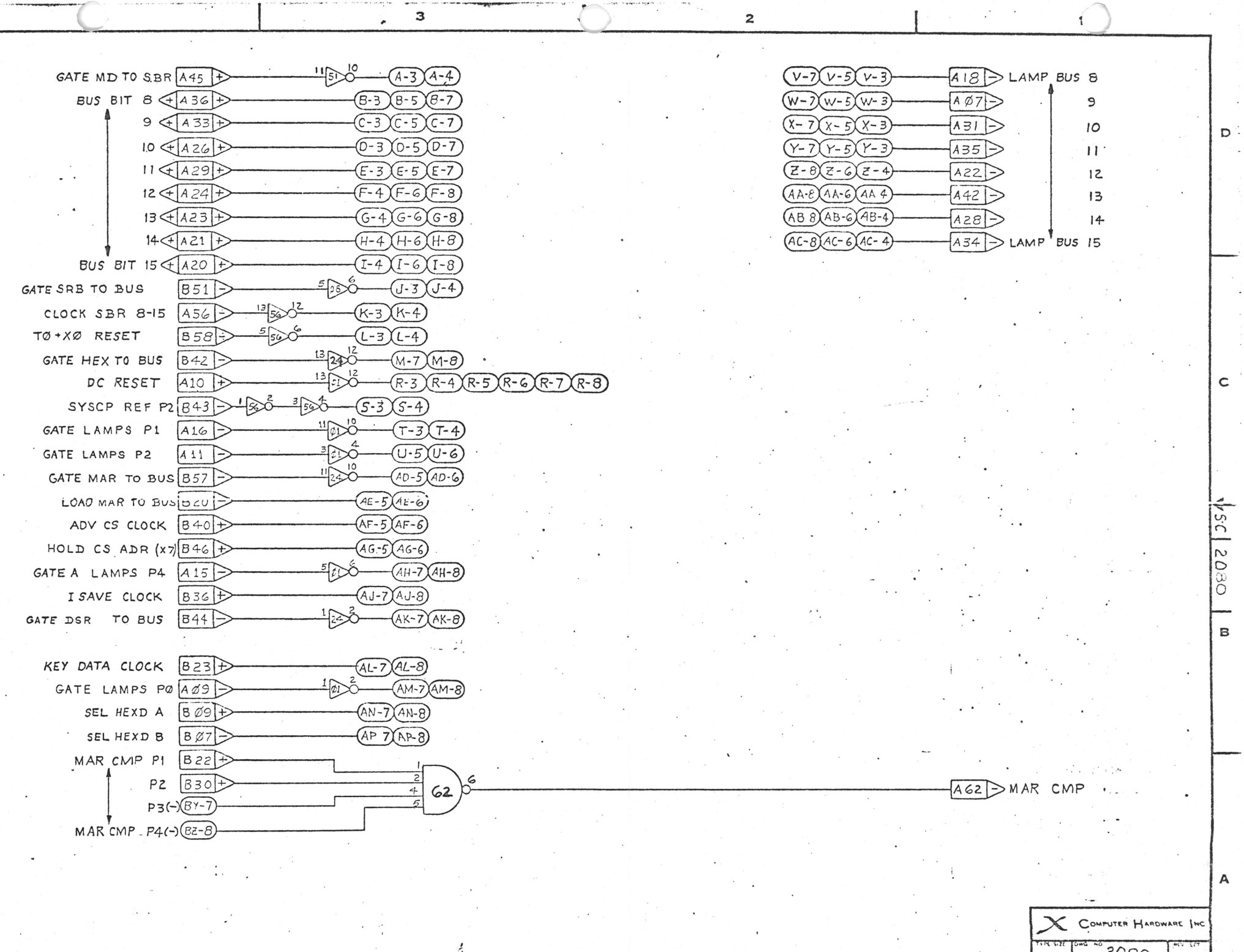

GATE MD TO SBR A45 + 51 A-3 A-4
BUS BIT 8 + A36 + B-3 B-5 B-7
9 + A33 + C-3 C-5 C-7
10 + A26 + D-3 D-5 D-7
11 + A29 + E-3 E-5 E-7
12 + A24 + F-4 F-6 F-8
13 + A23 + G-4 G-6 G-8
14 + A21 + H-4 H-6 H-8
BUS BIT 15 + A20 + I-4 I-6 I-8
GATE SRB TO BUS B51 - 08 J-3 J-4
CLOCK SBR 8-15 A56 - 56 K-3 K-4
TØ+XØ RESET B58 - 56 L-3 L-4
GATE HEX TO BUS B42 - 24 M-7 M-8
DC RESET A10 + 01 R-3 R-4 R-5 R-6 R-7 R-8
SYSCP REF P2 B43 - 56 56 S-3 S-4
GATE LAMPS P1 A16 - Ø1 T-3 T-4
GATE LAMPS P2 A11 - Ø1 U-5 U-6
GATE MAR TO BUS B57 - 24 AD-5 AD-6
LOAD MAR TO BUS B20 - AE-5 AE-6
ADV CS CLOCK B40 + AF-5 AF-6
HOLD CS ADR (x7) B46 + AG-5 AG-6
GATE A LAMPS P4 A15 - Ø1 AH-7 AH-8
I SAVE CLOCK B36 + AJ-7 AJ-8
GATE DSR TO BUS B44 - 24 AK-7 AK-8
KEY DATA CLOCK B23 + AL-7 AL-8
GATE LAMPS PØ AØ9 - Ø1 AM-7 AM-8
SEL HEXD A BØ9 + AN-7 AN-8
SEL HEXD B BØ7 - AP 7 AP-8
MAR CMP P1 B22 +
P2 B30 +
P3(-) BY-7
MAR CMP P4(-) BZ-8
62
A62 - MAR CMP
V-7 V-5 V-3 A18 - LAMP BUS 8
W-7 W-5 W-3 AØ7 - 9
X-7 X-5 X-3 A31 - 10
Y-7 Y-5 Y-3 A35 - 11
Z-8 Z-6 Z-4 A22 - 12
AA-8 AA-6 AA 4 A42 - 13
AB 8 AB-6 AB-4 A28 - 14
AC-8 AC-6 AC-4 A34 - LAMP BUS 15
VSC 2080
COMPUTER HARDWARE INC

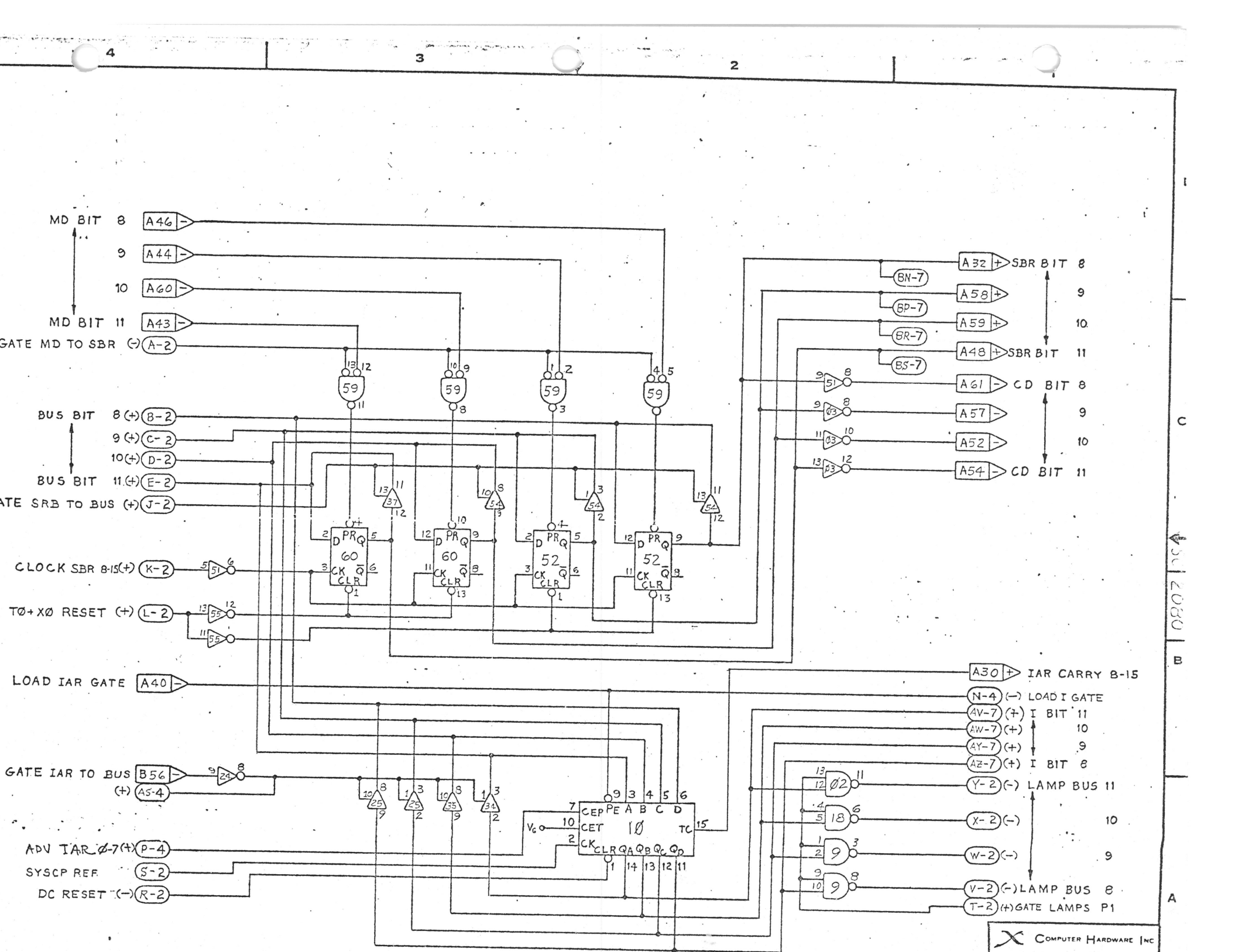
MD BIT 8
9
10
MD BIT 11
GATE MD TO SBR (-)
BUS BIT 8 (+)
9 (+)
10 (+)
BUS BIT 11 (+)
ATE SRB TO BUS (+)
CLOCK SBR 8-15 (+)
TØ+XØ RESET (+)
LOAD IAR GATE
GATE IAR TO BUS (+)
ADV IAR Ø-7 (+)
SYSCP REF
DC RESET (-)
SBR BIT 8
9
10
SBR BIT 11
CD BIT 8
9
10
CD BIT 11
IAR CARRY 8-15
LOAD I GATE
I BIT 11
10
9
I BIT 8
LAMP BUS 11
10
9
LAMP BUS 8
GATE LAMPS P1
COMPUTER HARDWARE INC

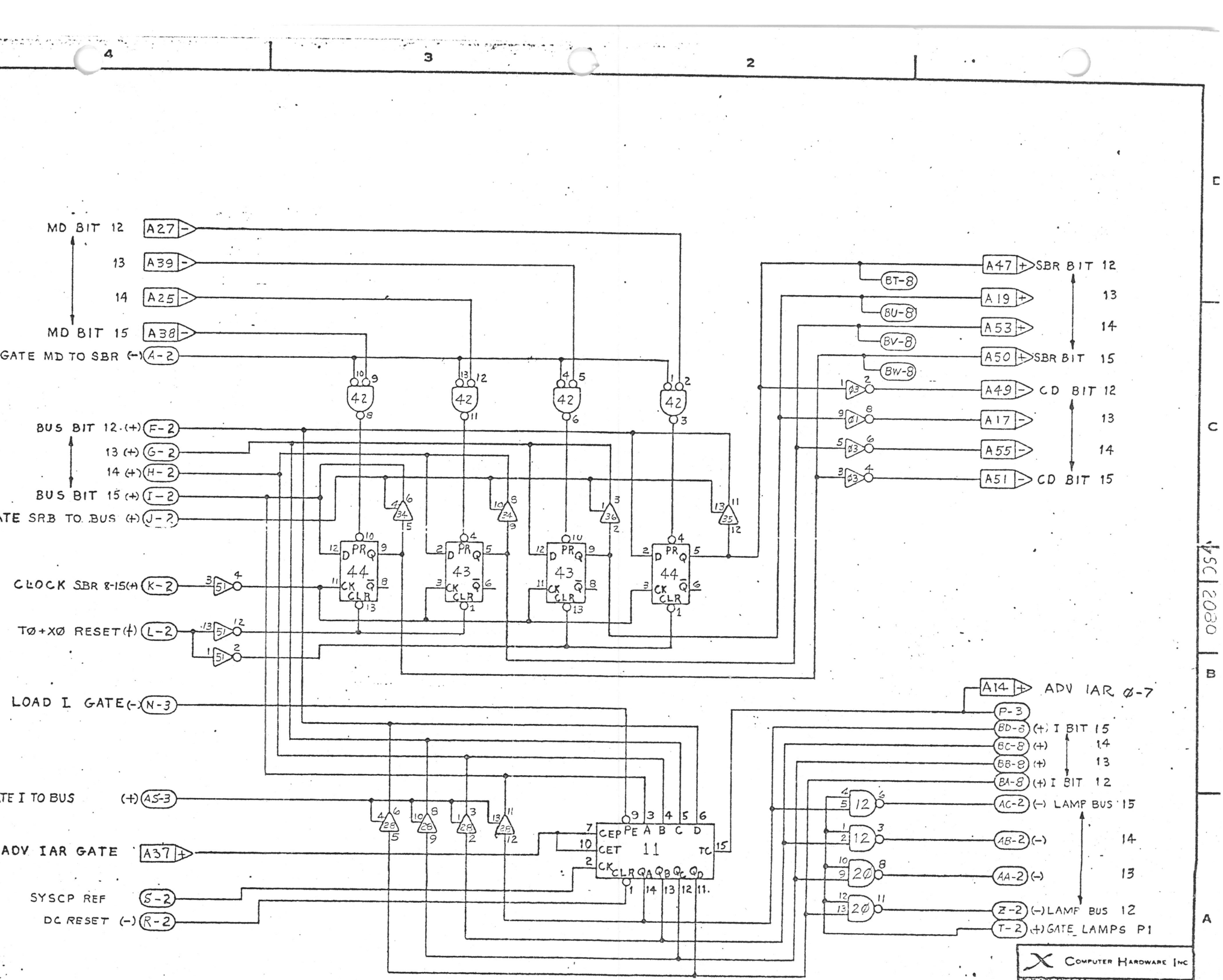

MD BIT 12
13
14
MD BIT 15
GATE MD TO SBR (-)
BUS BIT 12 (+)
13 (+)
14 (+)
BUS BIT 15 (+)
TE SRB TO BUS (+)
CLOCK SBR 8-15(+)
TØ+XØ RESET(+)
LOAD I GATE(-)
TE I TO BUS (+)
ADV IAR GATE
SYSCP REF
DC RESET (-)
A27
A39
A25
A38
A-2
F-2
G-2
H-2
I-2
J-2
K-2
L-2
N-3
AS-3
A37
S-2
R-2
BT-8
BU-8
BV-8
BW-8
A47
A19
A53
A50
A49
A17
A55
A51
SBR BIT 12
13
14
SBR BIT 15
CD BIT 12
13
14
CD BIT 15
A14
ADV IAR Ø-7
P-3
BD-8 (+) I BIT 15
BC-8 (+) 14
BB-8 (+) 13
BA-8 (+) I BIT 12
AC-2 (-) LAMP BUS 15
AB-2 (-) 14
AA-2 (-) 13
Z-2 (-) LAMP BUS 12
T-2 (+) GATE LAMPS P1
COMPUTER HARDWARE INC

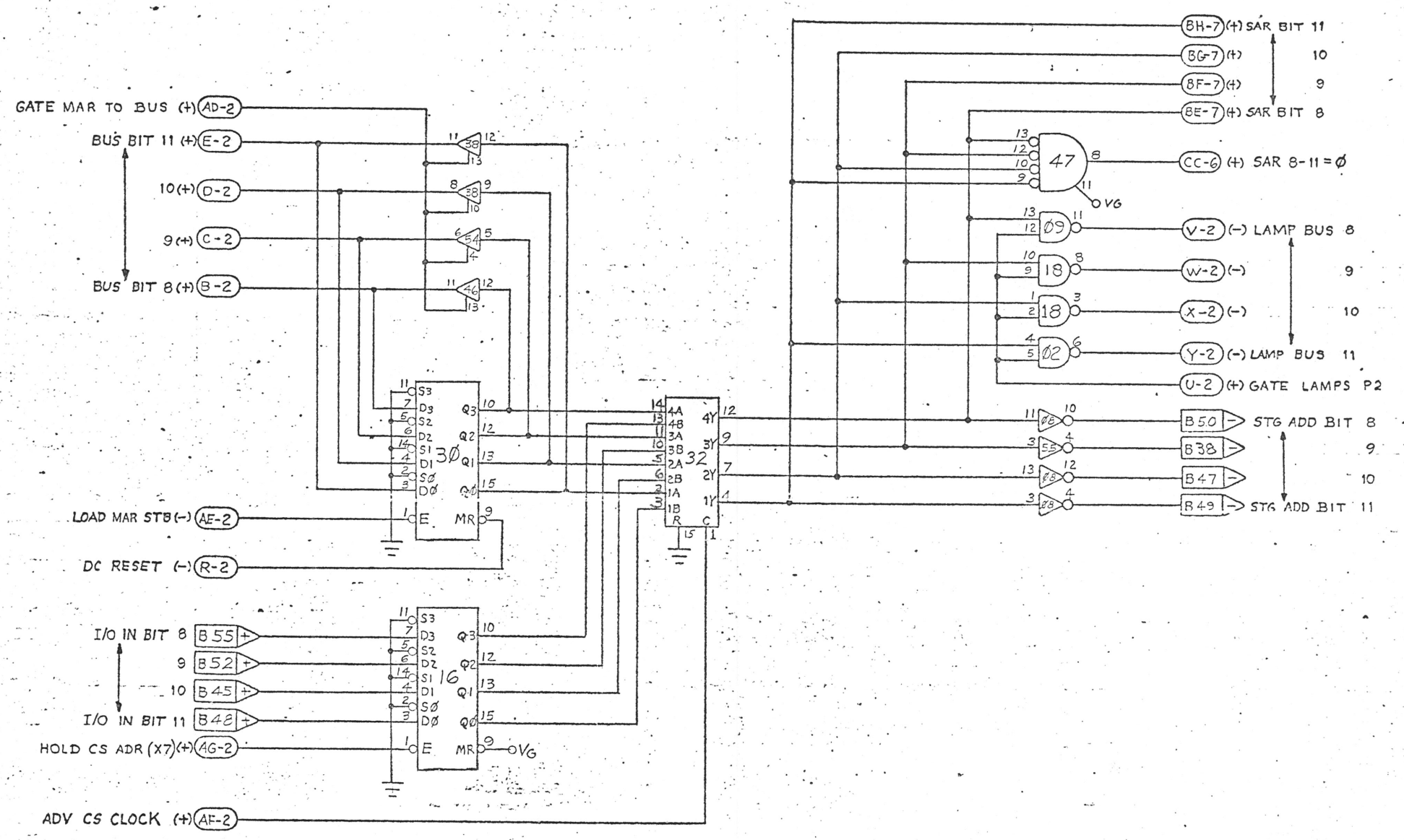

COMPUTER HARDWARE INC

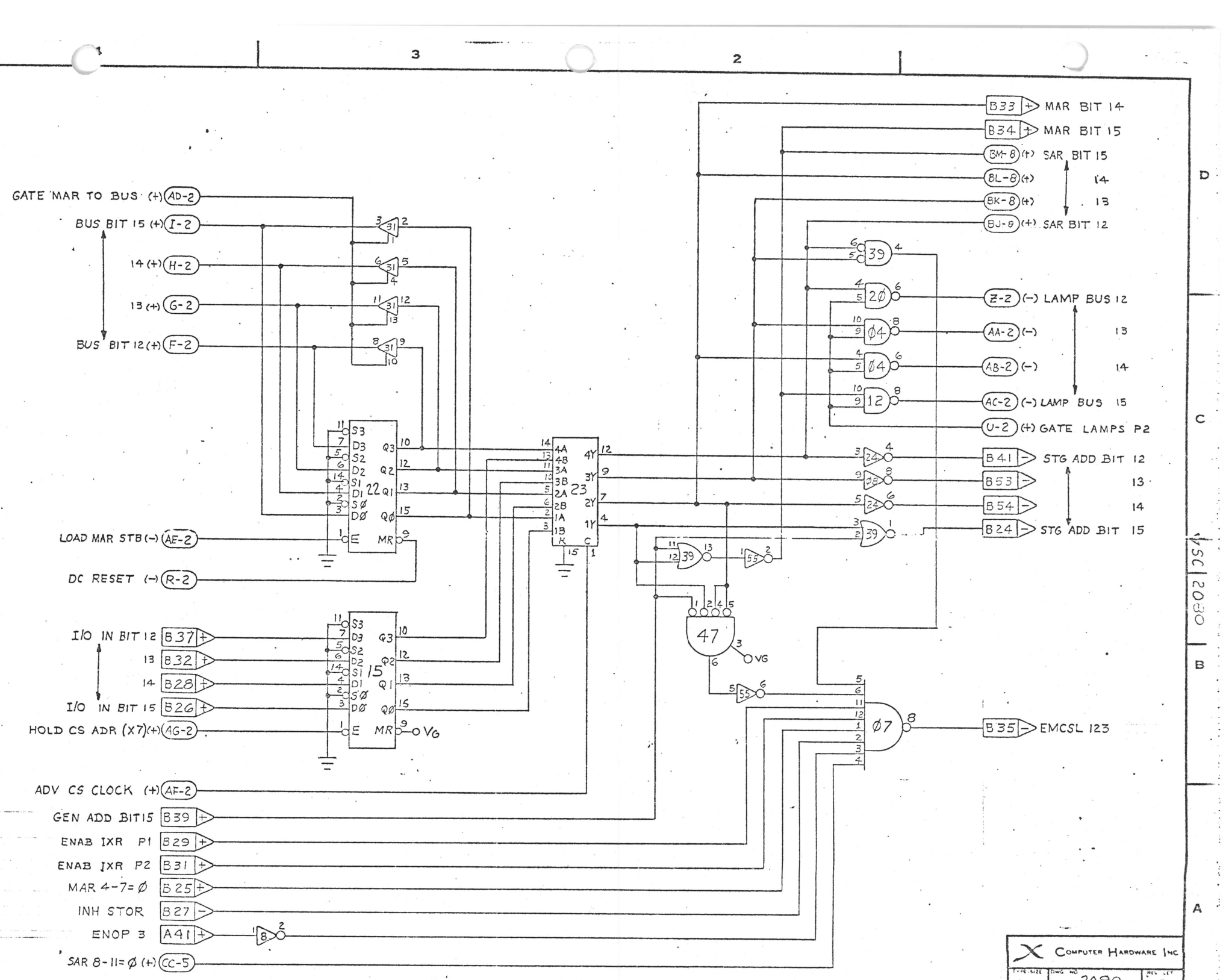

GATE MAR TO BUS (+) AD-2
BUS BIT 15 (+) I-2
14 (+) H-2
13 (+) G-2
BUS BIT 12 (+) F-2
LOAD MAR STB (-) AE-2
DC RESET (-) R-2
I/O IN BIT 12 B37
13 B32
14 B28
I/O IN BIT 15 B26
HOLD CS ADR (X7) (+) AG-2
ADV CS CLOCK (+) AF-2
GEN ADD BIT 15 B39
ENAB IXR P1 B29
ENAB IXR P2 B31
MAR 4-7=Ø B25
INH STOR B27
ENOP 3 A41
SAR 8-11=Ø (+) CC-5
B33 MAR BIT 14
B34 MAR BIT 15
BM-8 (+) SAR BIT 15
BL-8 (+) 14
BK-8 (+) 13
BJ-8 (+) SAR BIT 12
Z-2 (-) LAMP BUS 12
AA-2 (-) 13
AB-2 (-) 14
AC-2 (-) LAMP BUS 15
U-2 (+) GATE LAMPS P2
B41 STG ADD BIT 12
B53 13
B54 14
B24 STG ADD BIT 15
B35 EMCSL 123
VG
COMPUTER HARDWARE INC

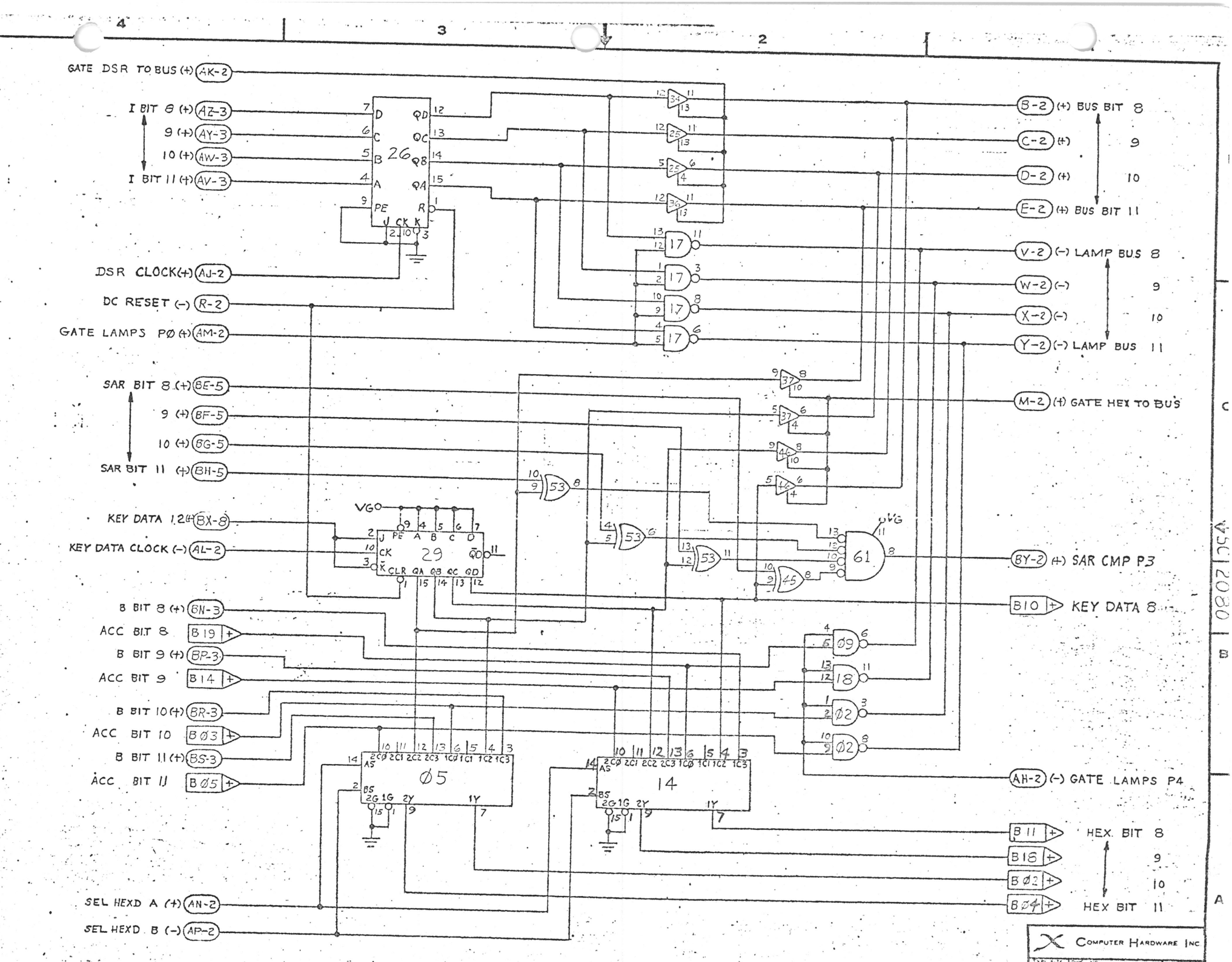
GATE DSR TO BUS (+) AK-2
I BIT 8 (+) AZ-3
9 (+) AY-3
10 (+) AW-3
I BIT 11 (+) AV-3
DSR CLOCK (+) AJ-2
DC RESET (-) R-2
GATE LAMPS PØ (+) AM-2
SAR BIT 8 (+) BE-5
9 (+) BF-5
10 (+) BG-5
SAR BIT 11 (+) BH-5
KEY DATA 12 (+) BX-8
KEY DATA CLOCK (-) AL-2
B BIT 8 (+) BN-3
ACC BIT 8 B19
B BIT 9 (+) BP-3
ACC BIT 9 B14
B BIT 10 (+) BR-3
ACC BIT 10 BØ3
B BIT 11 (+) BS-3
ACC BIT 11 BØ5
SEL HEXD A (+) AN-2
SEL HEXD B (-) AP-2
B-2 (+) BUS BIT 8
C-2 (+) 9
D-2 (+) 10
E-2 (+) BUS BIT 11
V-2 (-) LAMP BUS 8
W-2 (-) 9
X-2 (-) 10
Y-2 (-) LAMP BUS 11
M-2 (+) GATE HEX TO BUS
BY-2 (+) SAR CMP P3
B10 KEY DATA 8
AH-2 (-) GATE LAMPS P4
B11 HEX BIT 8
B18 9
BØ2 10
BØ4 HEX BIT 11
26
29
Ø5
14
61
VG
COMPUTER HARDWARE INC

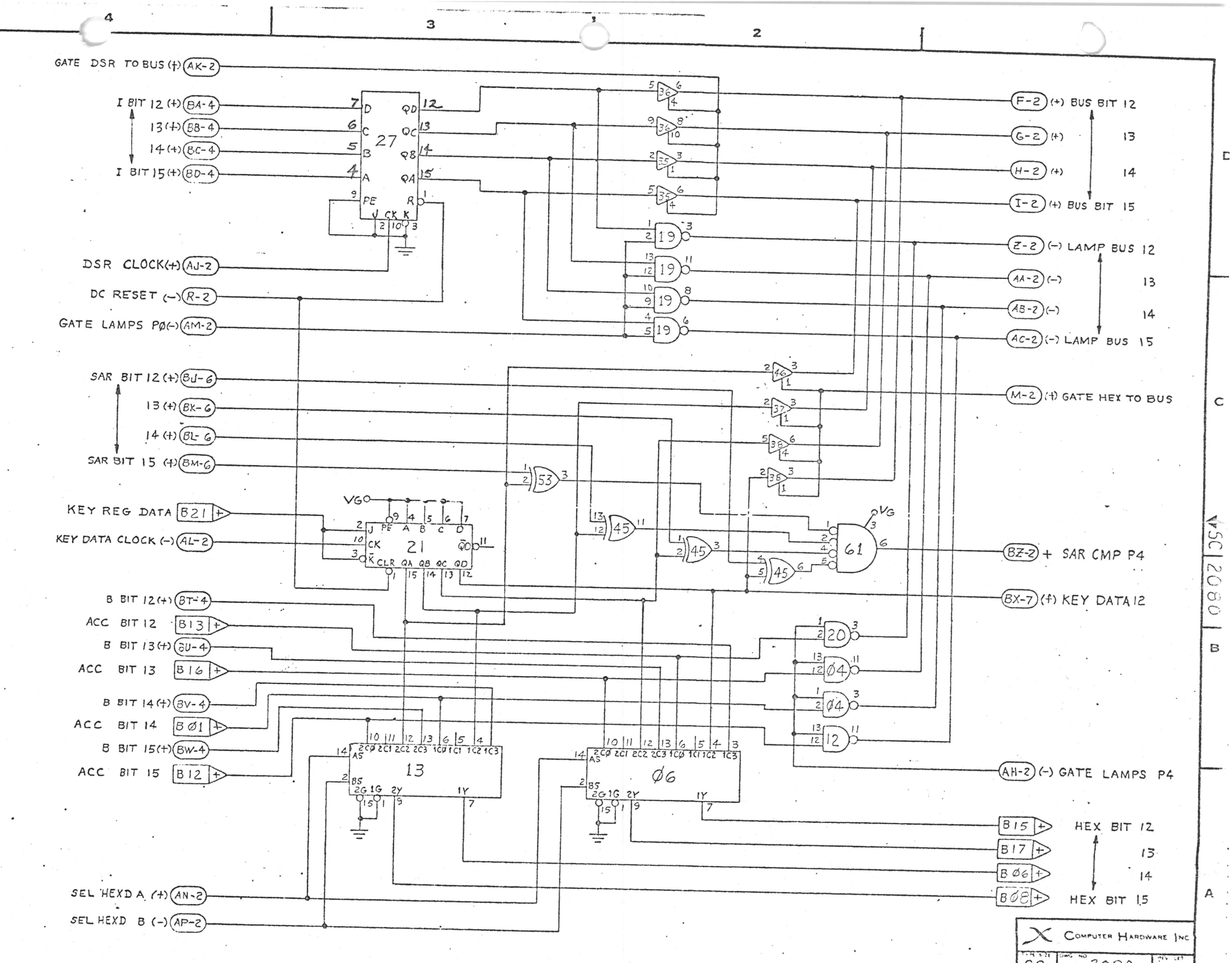

GATE DSR TO BUS (+) AK-2
I BIT 12 (+) BA-4
13 (+) BB-4
14 (+) BC-4
I BIT 15 (+) BD-4
DSR CLOCK (+) AJ-2
DC RESET (-) R-2
GATE LAMPS PØ (-) AM-2
SAR BIT 12 (+) BJ-6
13 (+) BK-6
14 (+) BL-6
SAR BIT 15 (+) BM-6
KEY REG DATA B21
KEY DATA CLOCK (-) AL-2
B BIT 12 (+) BT-4
ACC BIT 12 B13
B BIT 13 (+) BU-4
ACC BIT 13 B16
B BIT 14 (+) BV-4
ACC BIT 14 BØ1
B BIT 15 (+) BW-4
ACC BIT 15 B12
SEL HEXD A (+) AN-2
SEL HEXD B (-) AP-2
F-2 (+) BUS BIT 12
G-2 (+) 13
H-2 (+) 14
I-2 (+) BUS BIT 15
Z-2 (-) LAMP BUS 12
AA-2 (-) 13
AB-2 (-) 14
AC-2 (-) LAMP BUS 15
M-2 (+) GATE HEX TO BUS
BZ-2 + SAR CMP P4
BX-7 (+) KEY DATA 12
AH-2 (-) GATE LAMPS P4
B15 HEX BIT 12
B17 13
BØ6 14
BØ8 HEX BIT 15
27
21
13
Ø6
61
VG
COMPUTER HARDWARE INC
SC 2080

NOTES:
1- THIS DRAWING USED IN CONJUNCTION WITH PART NO. AC-2125

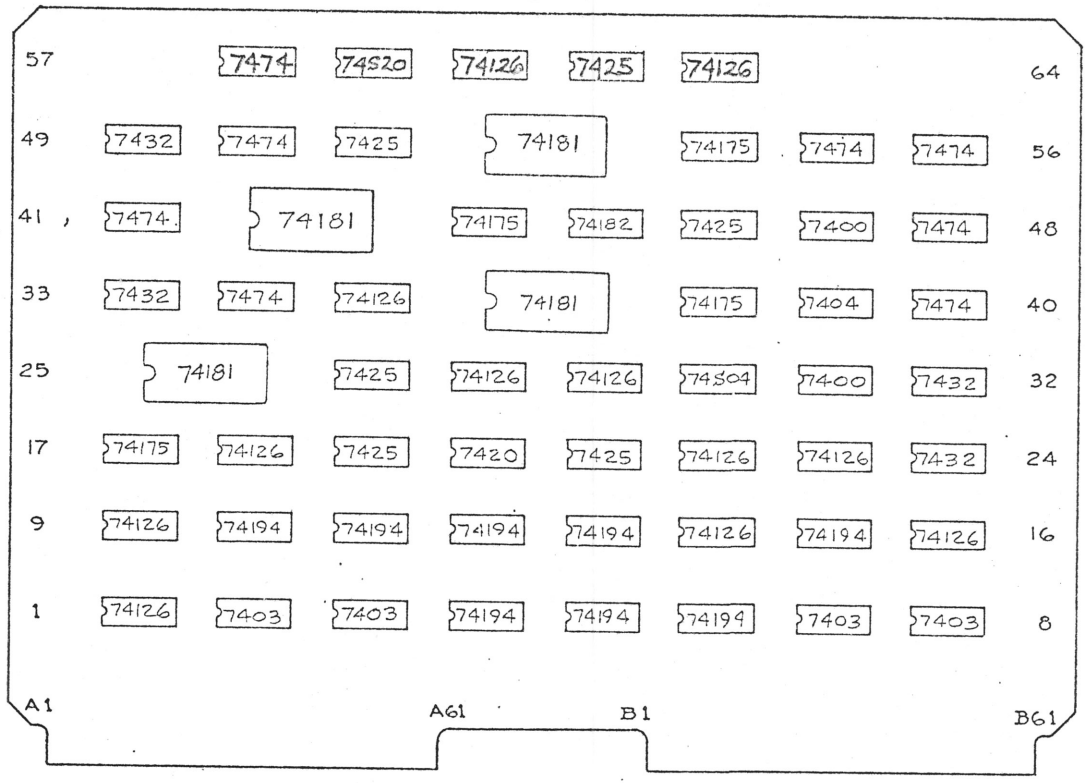

ASSEMBLY REVISION DATA (REF)

REV. LTR.	DESCRIPTION	EFFECT.

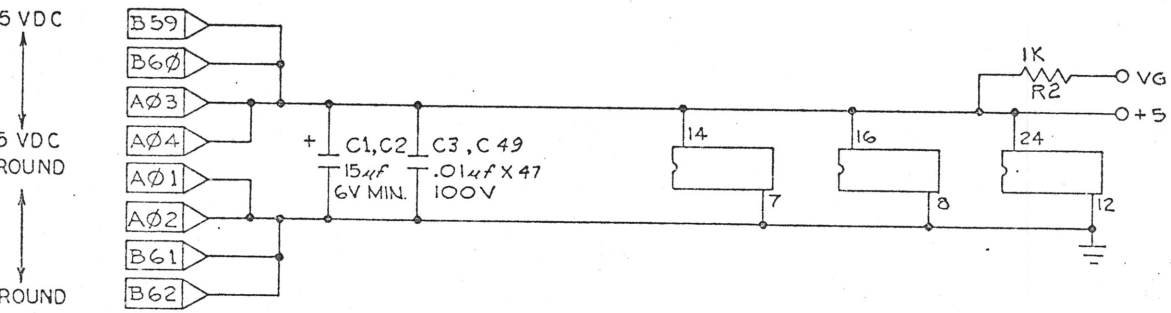

CONFIGURATION TABLE					
SC-2123		PC-2124		AC-2125	
REV	NC	REV	NC	REV	NC
	A		NC		A
	B		A		B

LAST USED TABLE		FILE NUMBER
CODE	REF. DES.	
SSS		
	C49	
	R2	

QTY REQD	PART OR FILE NUMBER	NOMENCLATURE	MFG PART NO OR MATERIAL	MFG NAME OR SPECIFICATION	ITEM NO

LIST OF MATERIALS

THIS PRINT CONTAINS PROPRIETARY INFORMATION. REPRODUCTION OF THIS PRINT OR ANY INFORMATION CONTAINED HEREIN OR MANUFACTURE OF ANY ARTICLE HEREFROM, FOR DISCLOSURE TO OTHERS IS FORBIDDEN, EXCEPT BY SPECIFIC WRITTEN PERMISSION FROM COMPUTER HARDWARE INC

UNLESS OTHERWISE SPECIFIED DIMENSIONS ARE IN INCHES
DIMENSION TOLERANCES
ANGULAR DIMENSION ±1/2°
DECIMAL 2 PLACE ±.010
DECIMAL 3 PLACE ±.010
BREAK SHARP EDGES MAX
INSIDE CORNERS MAX
ALL MACHINE SURFACES
CHAMFER ALL THREADS 45° X 1 FULL THREAD INTO EXT.

LETTER	DRN	CHK	DATE
B	KAF	[illegible]	7/10/75

TITLE: REGISTERS, ARITHMETIC - 2131

COMPUTER HARDWARE INC.

DRAWN: DON 08-07-74 CHECKED: [illegible]
DESIGN: T.W.A. TEPS STYLE SIZE: SC DWG NO: 2123 REV LET: B

SC 2123

2096

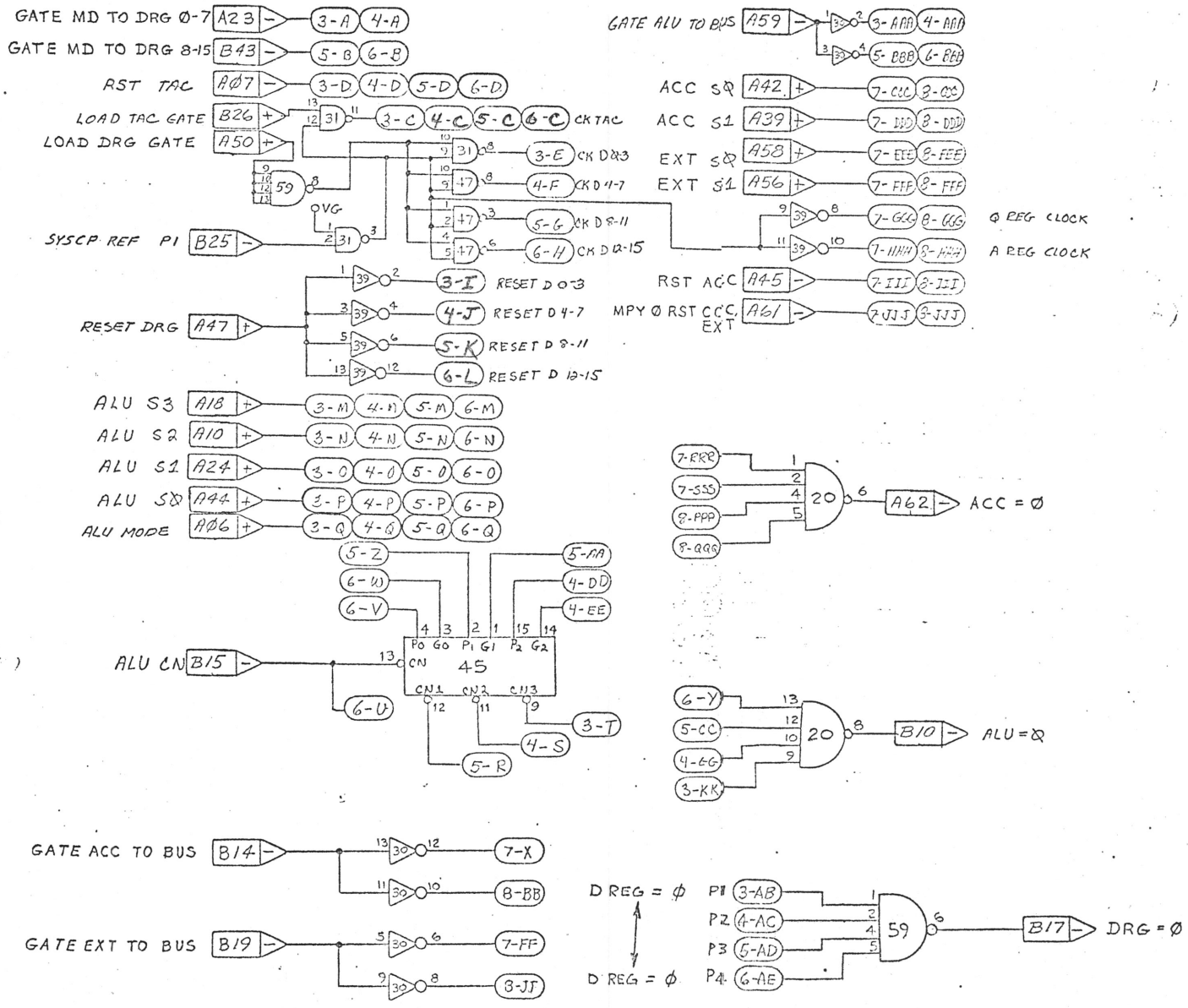
GATE MD TO DRG Ø-7
GATE MD TO DRG 8-15
RST TAC
LOAD TAC GATE
LOAD DRG GATE
SYSCP REF P1
RESET DRG
ALU S3
ALU S2
ALU S1
ALU SØ
ALU MODE
ALU CN
GATE ACC TO BUS
GATE EXT TO BUS
GATE ALU TO BUS
ACC SQ
ACC S1
EXT SQ
EXT S1
RST ACC
MPY Ø RST CCC EXT
Q REG CLOCK
A REG CLOCK
RESET D 0-3
RESET D 4-7
RESET D 8-11
RESET D 12-15
CK TAC
CK D Ø-3
CK D 4-7
CK D 8-11
CK D 12-15
ACC = Ø
ALU = Ø
DRG = Ø
D REG = Ø
D REG = Ø
P1
P2
P3
P4

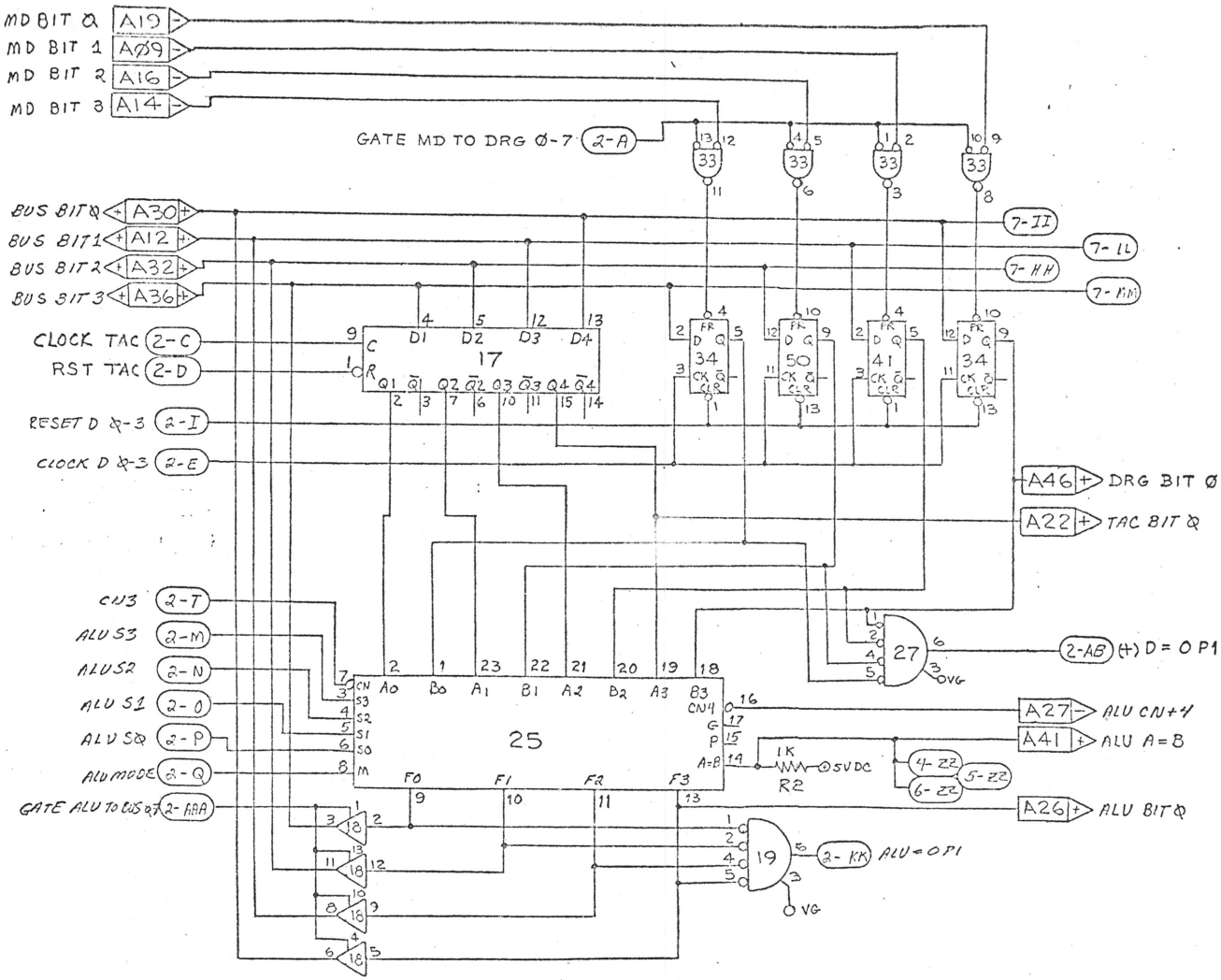

COMPUTER HARDWARE INC

TYPE-SIZE	DWG NO	REV LET
SC	2123	B

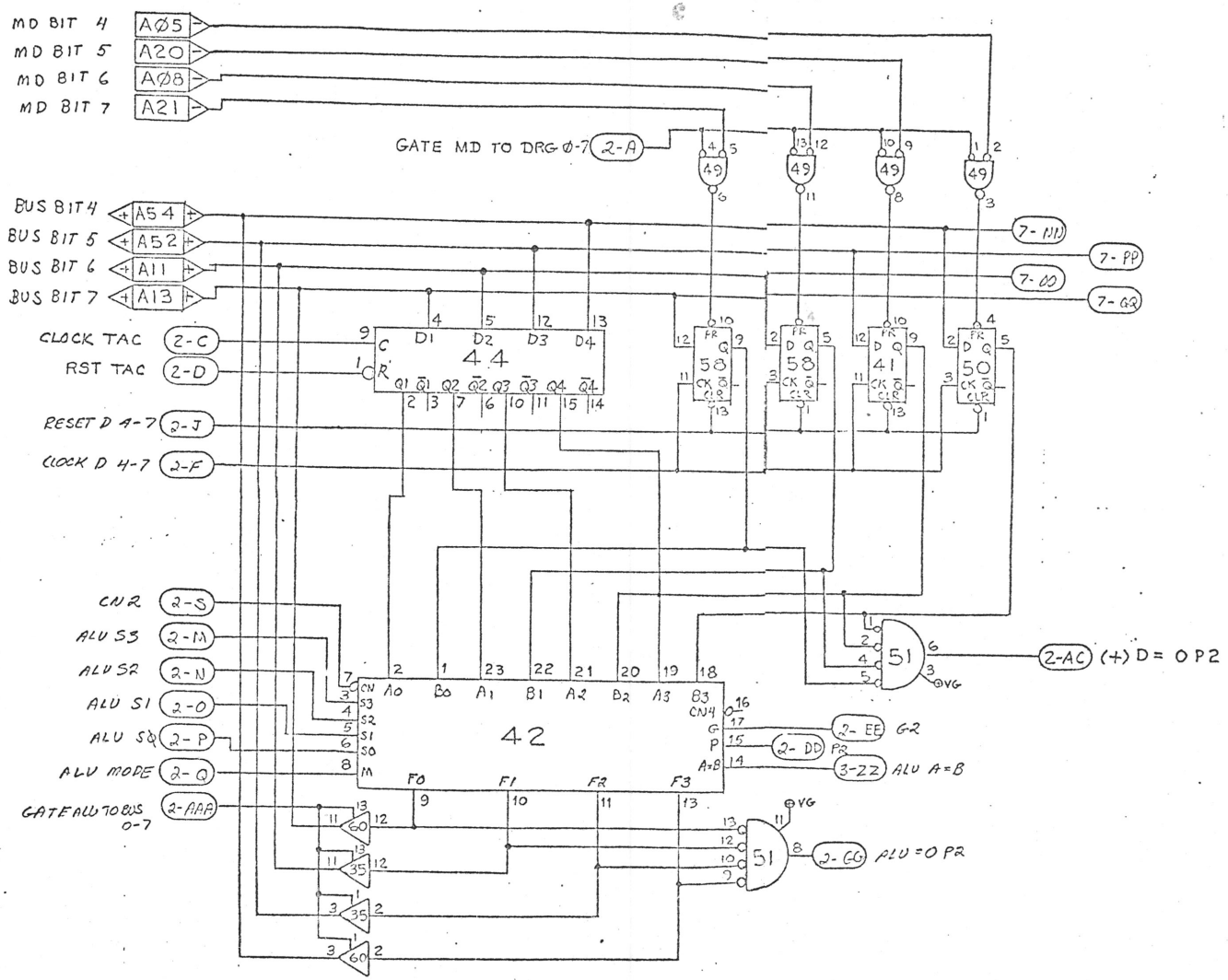

COMPUTER HARDWARE INC			
TYPE-SIZE SC	DWG NO 2123	REV LET	

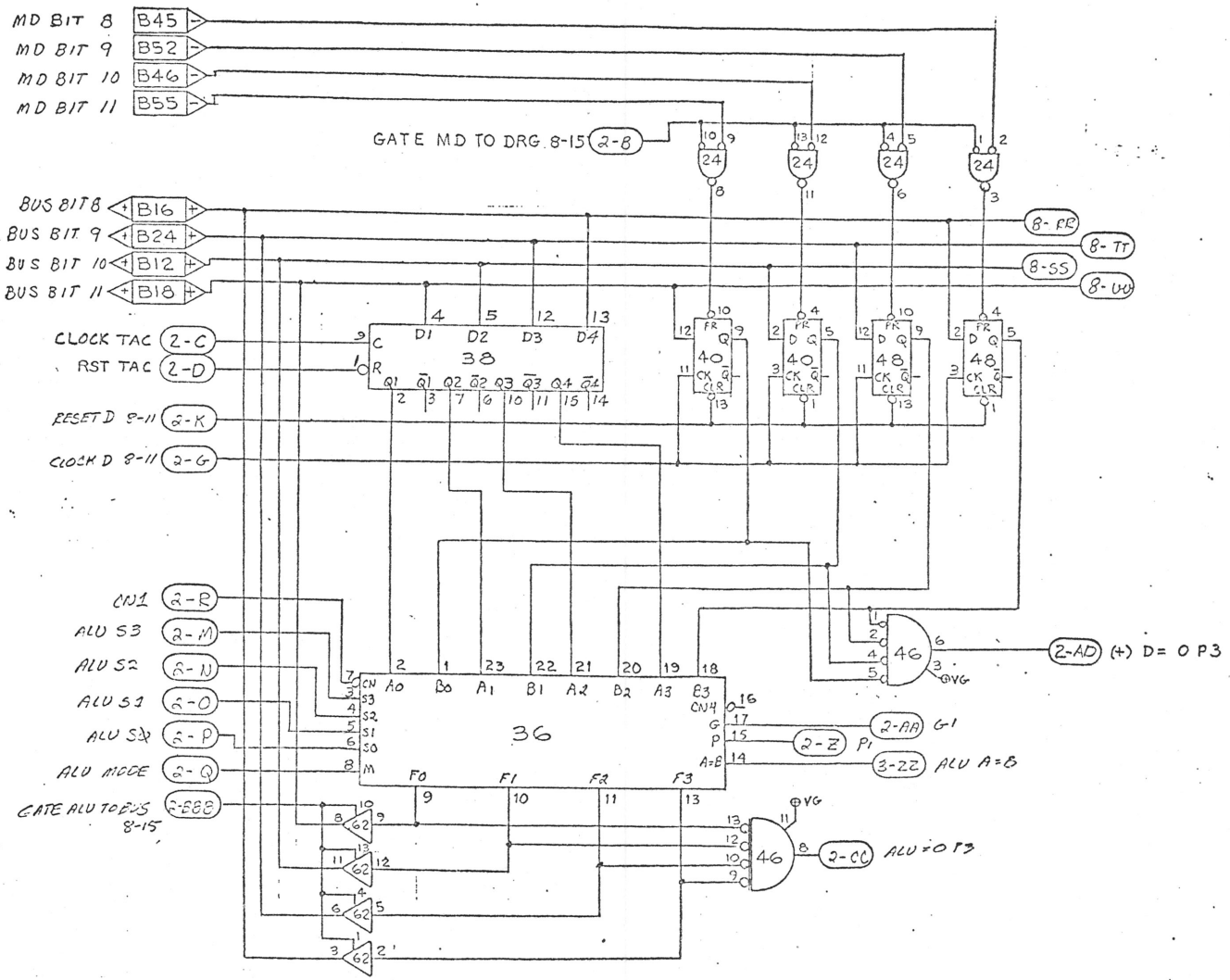
MD BIT 8
MD BIT 9
MD BIT 10
MD BIT 11
B45
B52
B46
B55
GATE MD TO DRG. 8-15
2-8
BUS BIT 8
BUS BIT 9
BUS BIT 10
BUS BIT 11
B16
B24
B12
B18
8-RR
8-TT
8-SS
8-UU
CLOCK TAC
RST TAC
2-C
2-D
38
40
48
RESET D 8-11
2-K
CLOCK D 8-11
2-G
CN1
ALU S3
ALU S2
ALU S1
ALU S0
ALU MODE
GATE ALU TO BUS 8-15
2-R
2-M
2-N
2-O
2-P
2-Q
2-EEE
36
62
46
2-AD
(+) D= 0 P3
2-AA
G1
2-Z
P1
3-22
ALU A=B
2-CC
ALU=0 F3

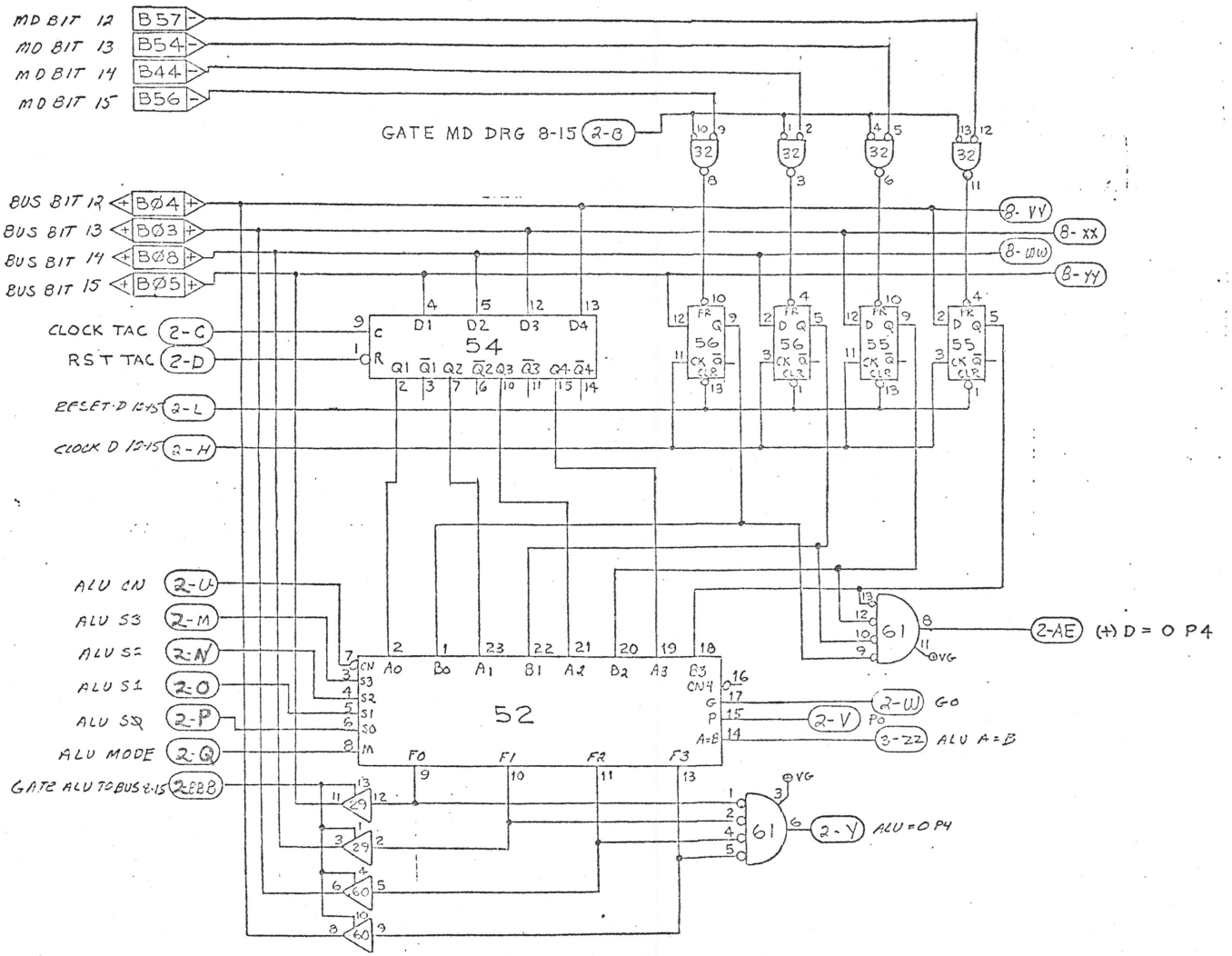

COMPUTER HARDWARE INC			
TYPE SIZE SC	DWG NO 2123 SHEET 6 OF 8	REV LET B	

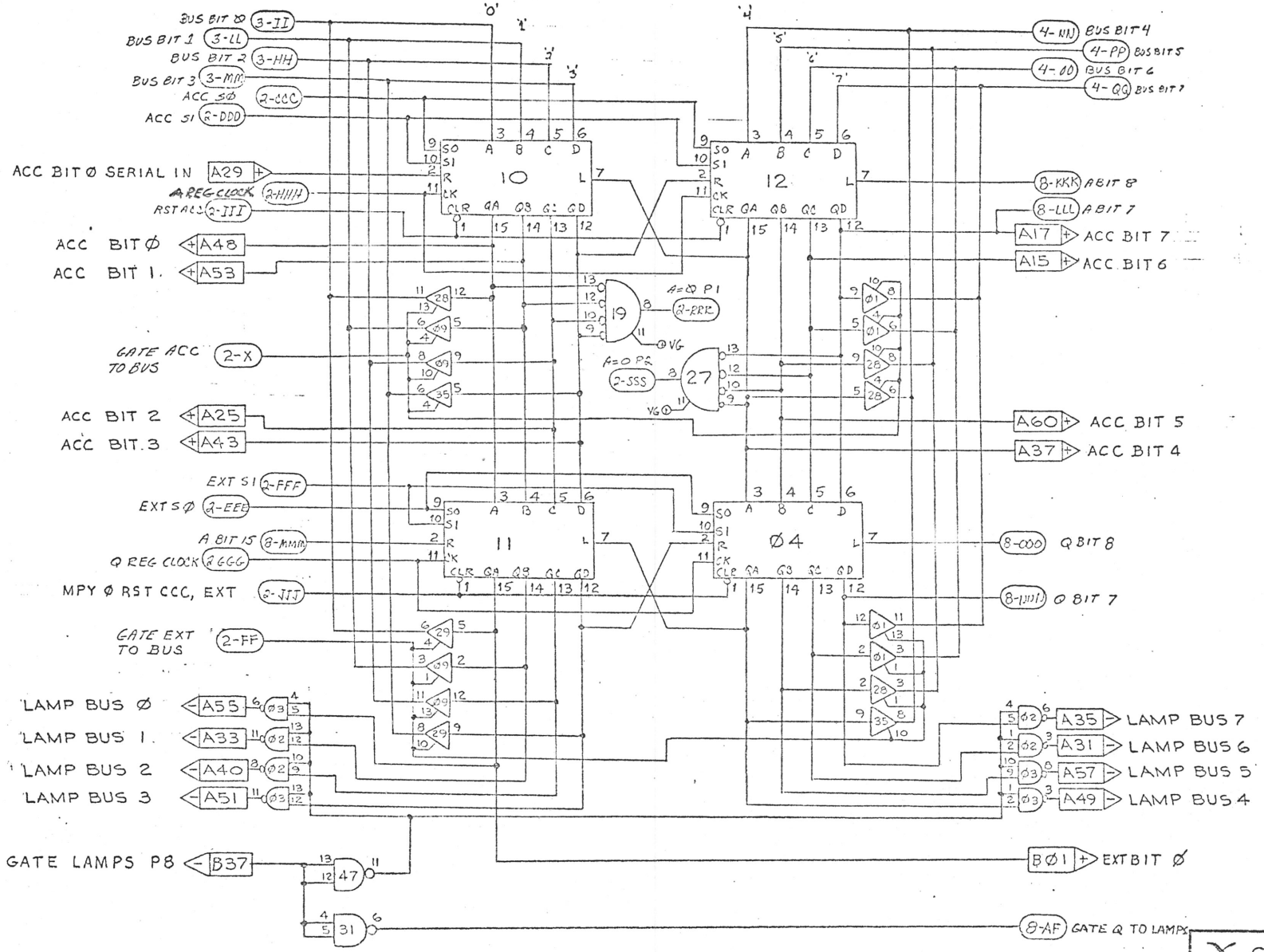

COMPUTER HARDWARE INC

TYPE-SIZE	DWG NO	REV LET
SC	2123 SHEET 7 OF 8	B

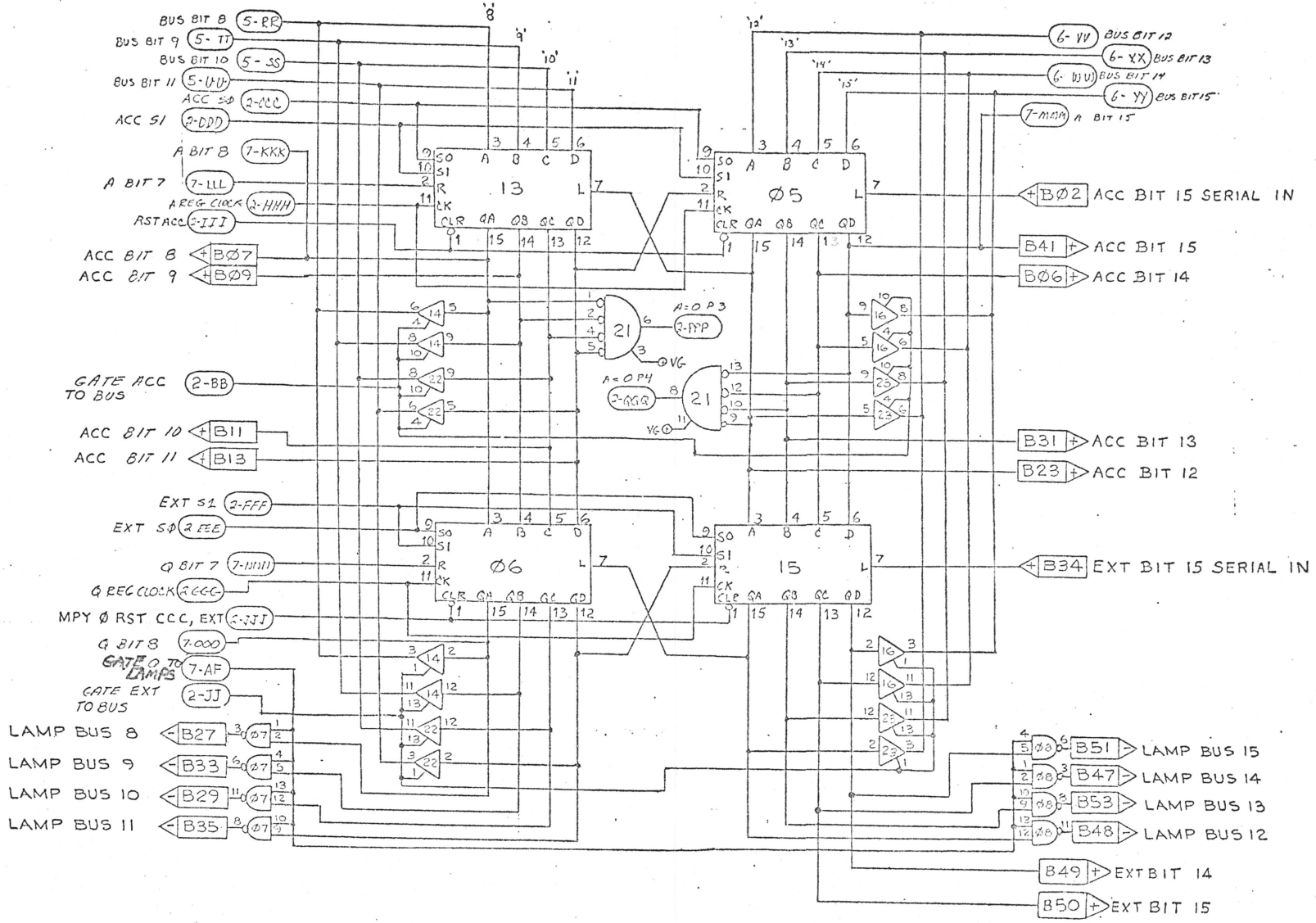
BUS BIT 8 5-RR
BUS BIT 9 5-TT
BUS BIT 10 5-SS
BUS BIT 11 5-UU
ACC S0 2-CCC
ACC S1 2-DDD
A BIT 8 7-KKK
A BIT 7 7-LLL
A REG CLOCK 2-HHH
RST ACC 2-III
ACC BIT 8 +BØ7
ACC BIT 9 +BØ9
GATE ACC TO BUS 2-BB
ACC BIT 10 +B11
ACC BIT 11 +B13
EXT S1 2-FFF
EXT S0 2-EEE
Q BIT 7 7-MMM
Q REC CLOCK 2-GGG
MPY Ø RST CCC, EXT 2-JJJ
Q BIT 8 7-NNN
GATE Q TO LAMPS 7-AF
GATE EXT TO BUS 2-JJ
LAMP BUS 8 -B27
LAMP BUS 9 -B33
LAMP BUS 10 -B29
LAMP BUS 11 -B35
13
Ø5
Ø6
15
21
A=0 P3 2-FFP
A=0 P4 2-GGG
6- VV BUS BIT 12
6- XX BUS BIT 13
6- UU BUS BIT 14
6- YY BUS BIT 15
7-MMM A BIT 15
+BØ2 ACC BIT 15 SERIAL IN
B41 + ACC BIT 15
BØ6 + ACC BIT 14
B31 + ACC BIT 13
B23 + ACC BIT 12
+B34 EXT BIT 15 SERIAL IN
B51 + LAMP BUS 15
B47 + LAMP BUS 14
B53 + LAMP BUS 13
B48 + LAMP BUS 12
B49 + EXT BIT 14
B50 + EXT BIT 15

NOTES:
1- DELETED.

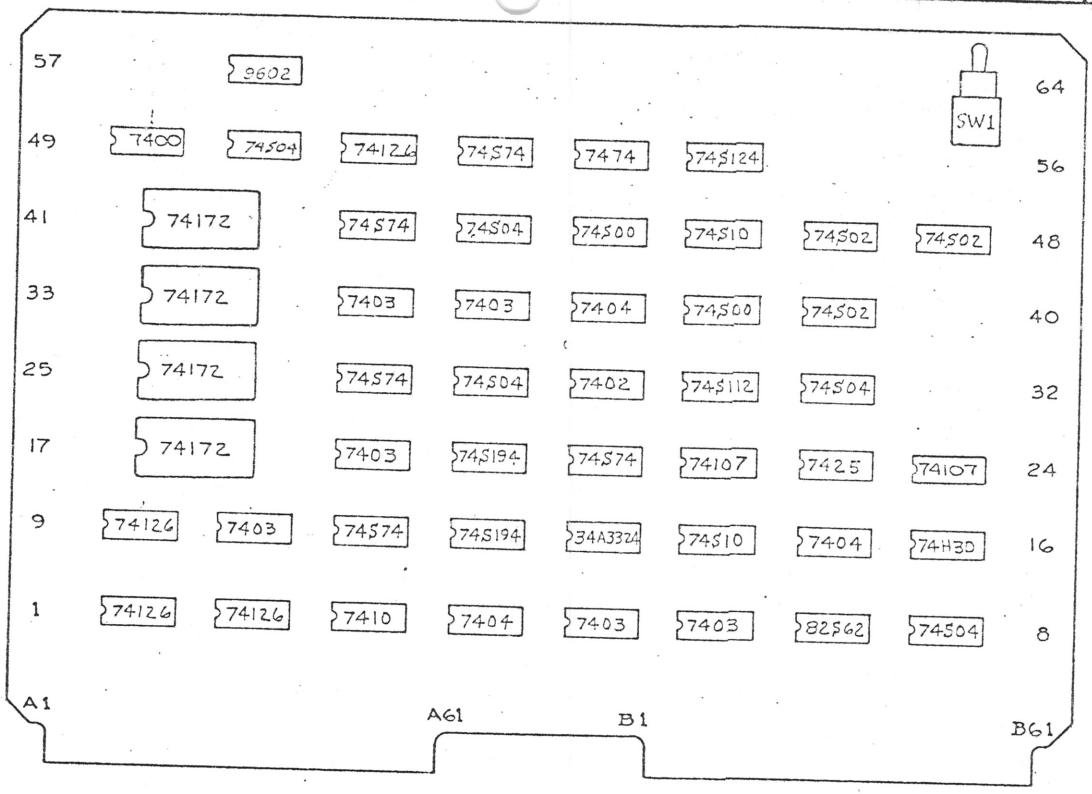

ASSEMBLY REVISION DATA (REF)

REV. LTR.	DESCRIPTION	REASON
A	POS. 32 & 40 IC Z100 REMOVED. RESISTORS R6 & R7 ADDED	TERMINALS REMOVED & PLACED ON 22A TO OPT. MEM. PULSE. BETTER SIGNAL NOISE RATIO WITH 1K TO +5.
B	POS 50 ADDED IC 74S04	[illegible] IMPROVEMENT
C	POS. 58 ADDED IC 9602, RESISTOR R8 & CAP C64	EXTEND X7, BETTER OPERATE DISC - PRINTER OVER LAP
J	ADD I.C. IN POSITIONS 49 & 57 DELETE I.C. FROM POSITION 24	TO PROVIDE FOR CYCLE-STEAL CYCLES CONCURRENT WITH SHIFT OPERATIONS
K	ADD I.C. AND CAP IN POS 24 DELETE I.C. FROM POS 57	[illegible]
L	ADD REWORK SHEET 5 TO CORRECT BLOCK CLOCK CIRCUITS	CORRECT BLOCK CLK CIRCUIT

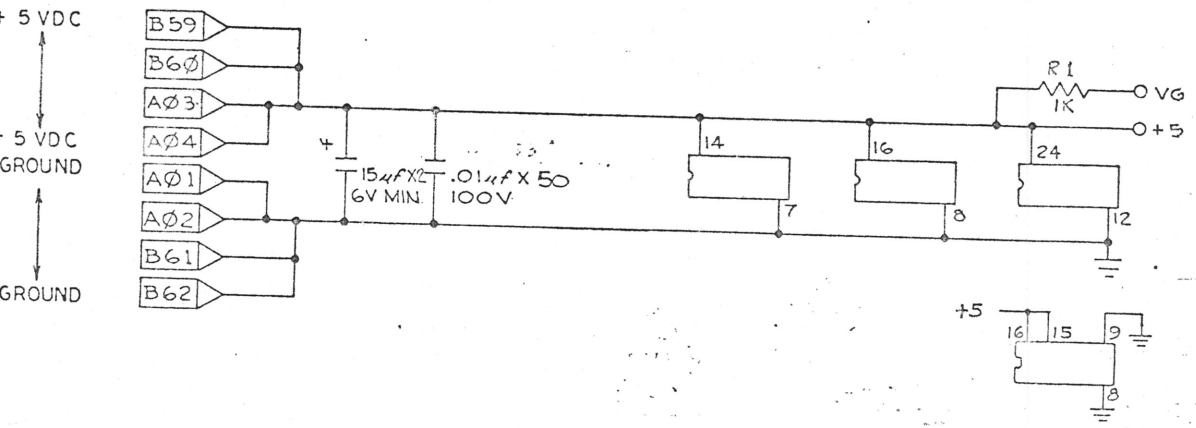

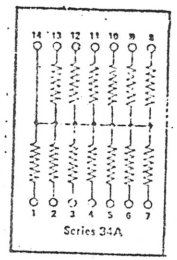

CONFIGURATION TABLE

MATIC	REV	PC	REV	ASSY	REV
2151	NC	PC-2152	NC	AC-2153	NC
2151	NC	PC-2152	NC	AC-2153	A
2151	A	PC-2152	NC	AC-2153	B
2151	B	PC-2152	NC	AC-2153	C
2151	B	PC-2152	NC	AC-2153	D
2151	C	PC-2152	NC	AC-2153	E
2151	D	PC-2152	A	AC-2153	F
2151	D	PC-2152	A	AC-2153	G
2151	5	PC-2152	A	AC-2153	H
[illegible]	[illegible]	[illegible]	[illegible]	[illegible]	[illegible]

CONFIGURATION TABLE

SC-2151	PC-2152	AC-2153
REV G	REV A	REV K
REV H	REV A	REV L

LAST USED TABLE

CODE	REF DES
CF	R8
	D4
	PoT 3
	C64

FILE NUMBER

QTY REQD	PART OR FILE NUMBER	NOMENCLATURE	MFG PART NO OR MATERIAL	MFG NAME OR SPECIFICATION	ITEM NO

LIST OF MATERIALS

THIS PRINT CONTAINS PROPRIETARY INFORMATION. REPRODUCTION OF THIS PRINT OR ANY INFORMATION CONTAINED HEREIN OR MANUFACTURE OF ANY ARTICLE HEREFROM FOR DISCLOSURE TO OTHERS IS FORBIDDEN EXCEPT BY SPECIFIC WRITTEN PERMISSION FROM COMPUTER HARDWARE INC

UNLESS OTHERWISE SPECIFIED DIMENSIONS ARE IN INCHES
DIMENSION TOLERANCES
ANGULAR DIMENSION ± 1°
DECIMAL 2 PLACE ± .020
DECIMAL 3 PLACE ± .010
BREAK SHARP EDGES MAX
INSIDE CORNERS MAX
ALL MACHINE SURFACES
CHAMFER ALL THREADS
ASTM FULL THREAD INTAKT
DO NOT SCALE THIS PRINT

LETTER	DRN	CHK	DATE
H	[illegible]	[illegible]	[illegible]

CHANGE RECORD NO 2151

TITLE REGISTER OP INDEX Ø-7 -2131

X COMPUTER HARDWARE INC
TCW 11-8-77 [illegible]

DRAWN A. FREDELL
CHECKED [illegible]
DESIGN T. WALTERS
SCALE
TYPE SIZE SC
DWG NO 2151
REV H

SC 2151 B

A
C 2096

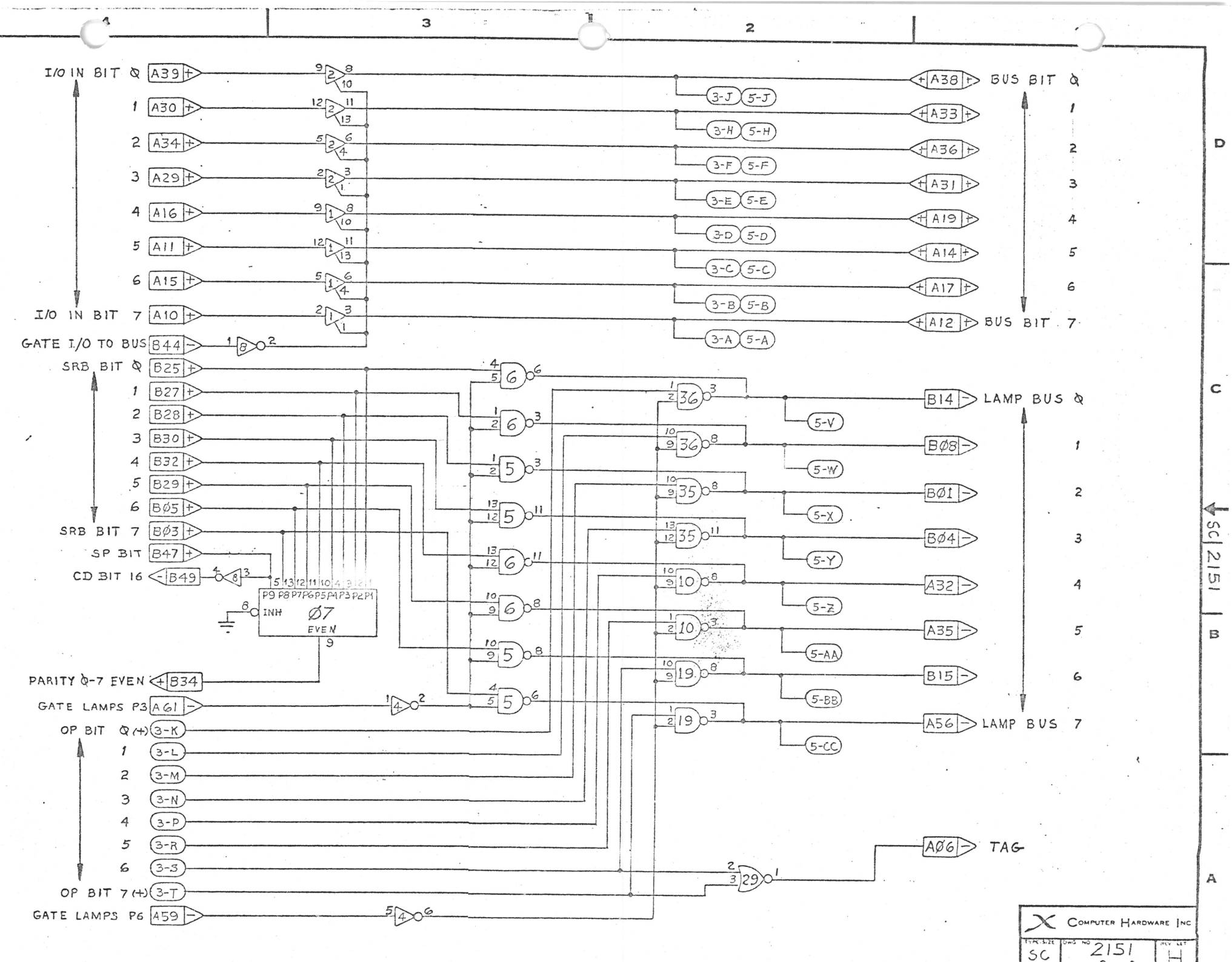

I/O IN BIT Ø
I/O IN BIT 7
GATE I/O TO BUS
SRB BIT Ø
SRB BIT 7
SP BIT
CD BIT 16
PARITY Ø-7 EVEN
GATE LAMPS P3
OP BIT Ø (+)
OP BIT 7 (+)
GATE LAMPS P6
BUS BIT Ø
BUS BIT 7
LAMP BUS Ø
LAMP BUS 7
TAG
INH
Ø7
EVEN
COMPUTER HARDWARE INC
SC
2151

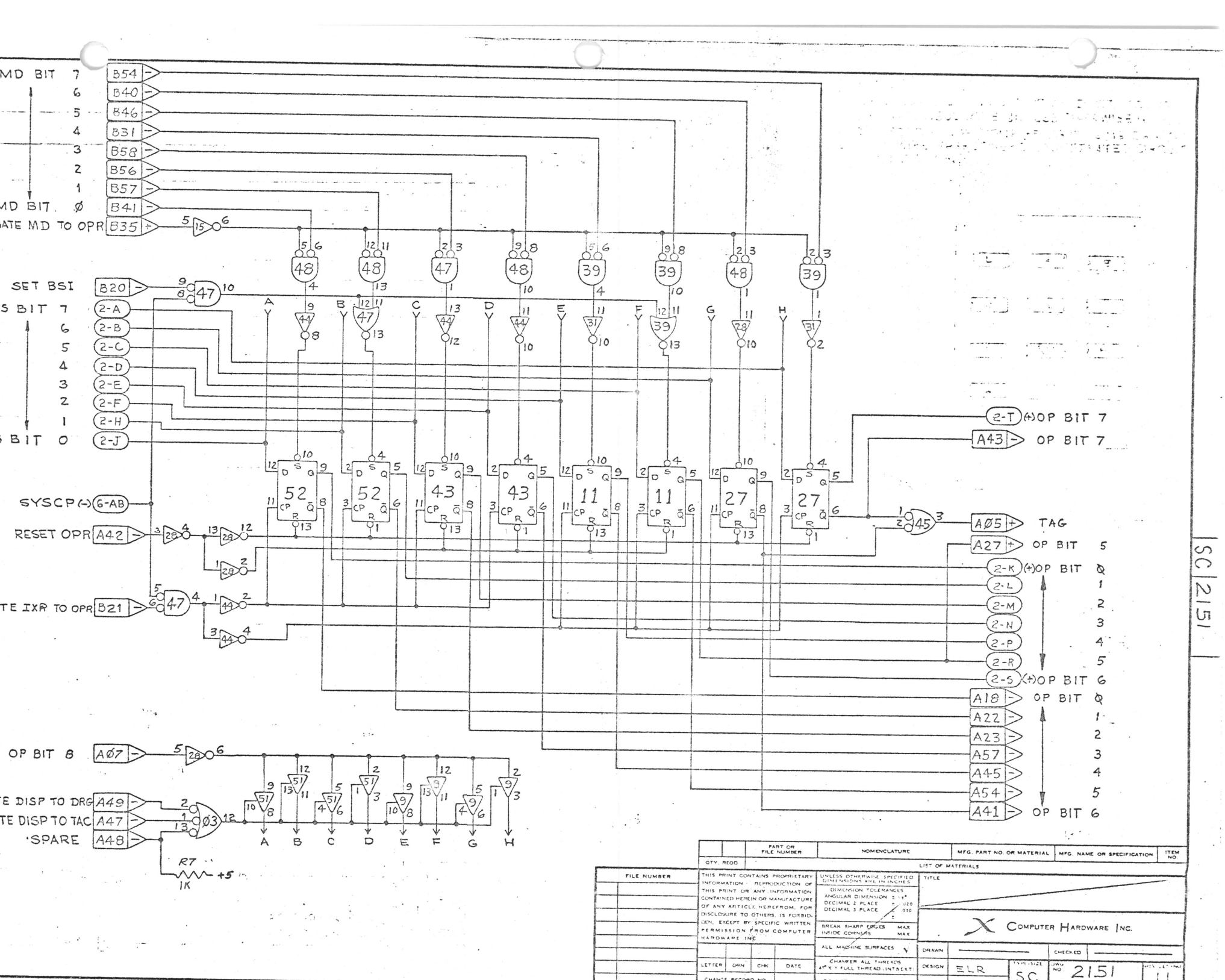

QTY. REQD	PART OR FILE NUMBER	NOMENCLATURE	MFG. PART NO. OR MATERIAL	MFG. NAME OR SPECIFICATION	ITEM NO
		LIST OF MATERIALS			

FILE NUMBER

THIS PRINT CONTAINS PROPRIETARY INFORMATION. REPRODUCTION OF THIS PRINT OR ANY INFORMATION CONTAINED HEREIN OR MANUFACTURE OF ANY ARTICLE HEREFROM, FOR DISCLOSURE TO OTHERS, IS FORBIDDEN, EXCEPT BY SPECIFIC WRITTEN PERMISSION FROM COMPUTER HARDWARE INC.

UNLESS OTHERWISE SPECIFIED DIMENSIONS ARE IN INCHES
DIMENSION TOLERANCES
ANGULAR DIMENSION ± 1/2°
DECIMAL 2 PLACE ± .020
DECIMAL 3 PLACE ± .010
BREAK SHARP EDGES MAX
INSIDE CORNERS MAX
ALL MACHINE SURFACES
CHAMFER ALL THREADS 45° X 1 FULL THREAD INTACT

LETTER	DRN	CHK	DATE
CHANGE RECORD NO.			

TITLE

COMPUTER HARDWARE INC.

DRAWN		CHECKED	
DESIGN	ELR	SYSTEM SIZE SC	DWG NO 2151

SC 2151

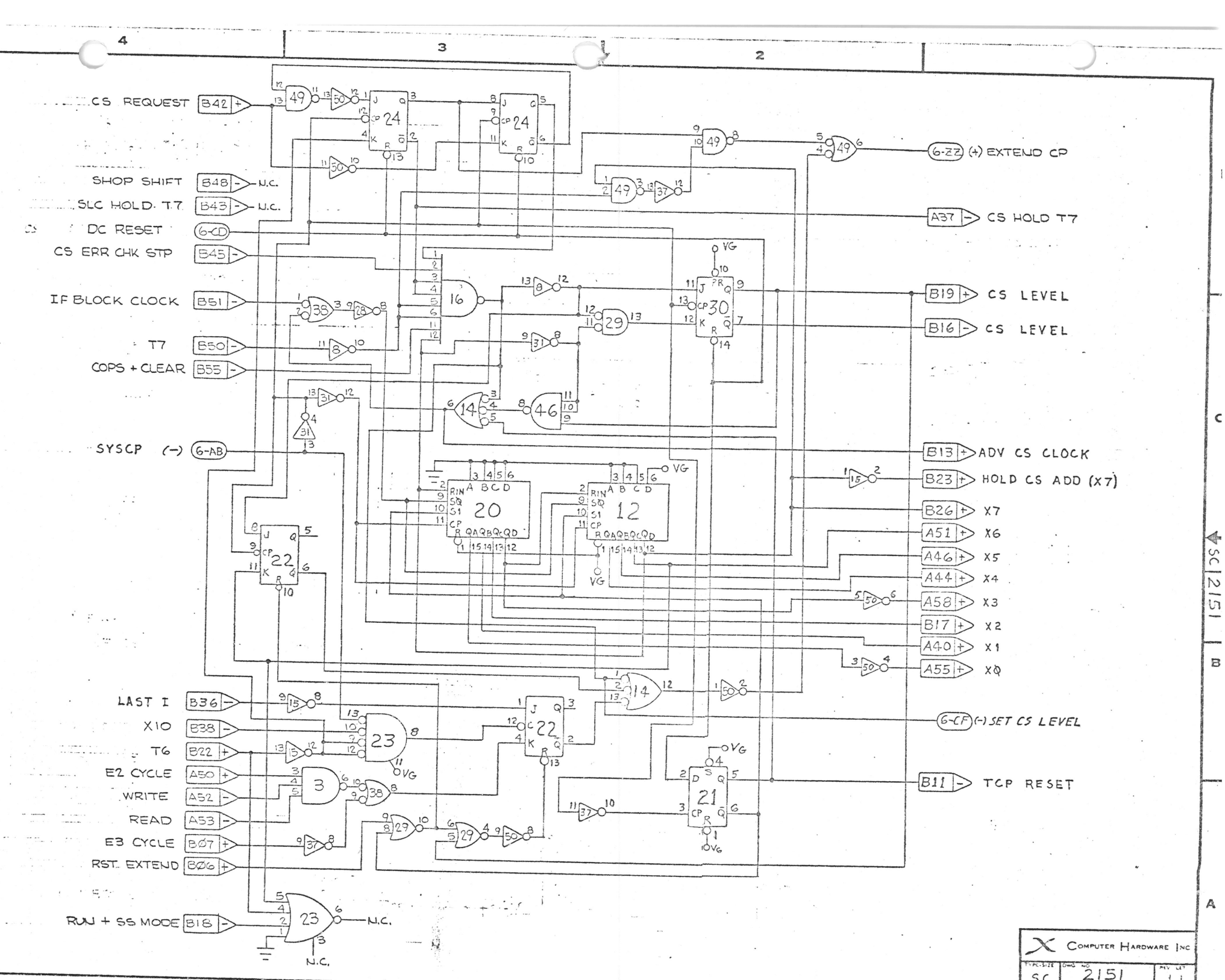

COMPUTER HARDWARE INC			
SIZE SC	DWG NO 2151	REV LET	

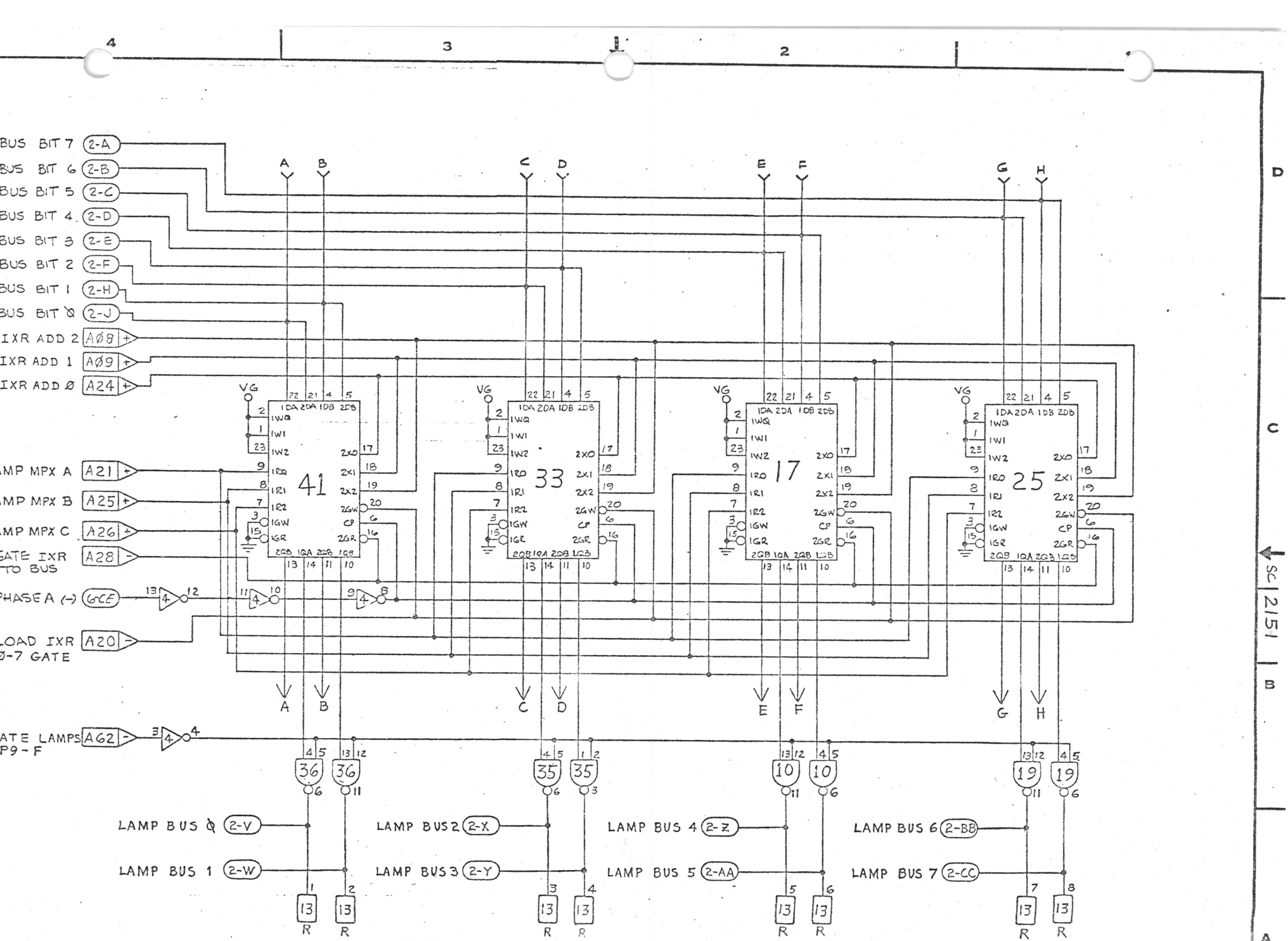

Computer Hardware Inc			
TYP-SIZE SC	DWG NO 2151	SHEET 5 OF 6	REV LET H

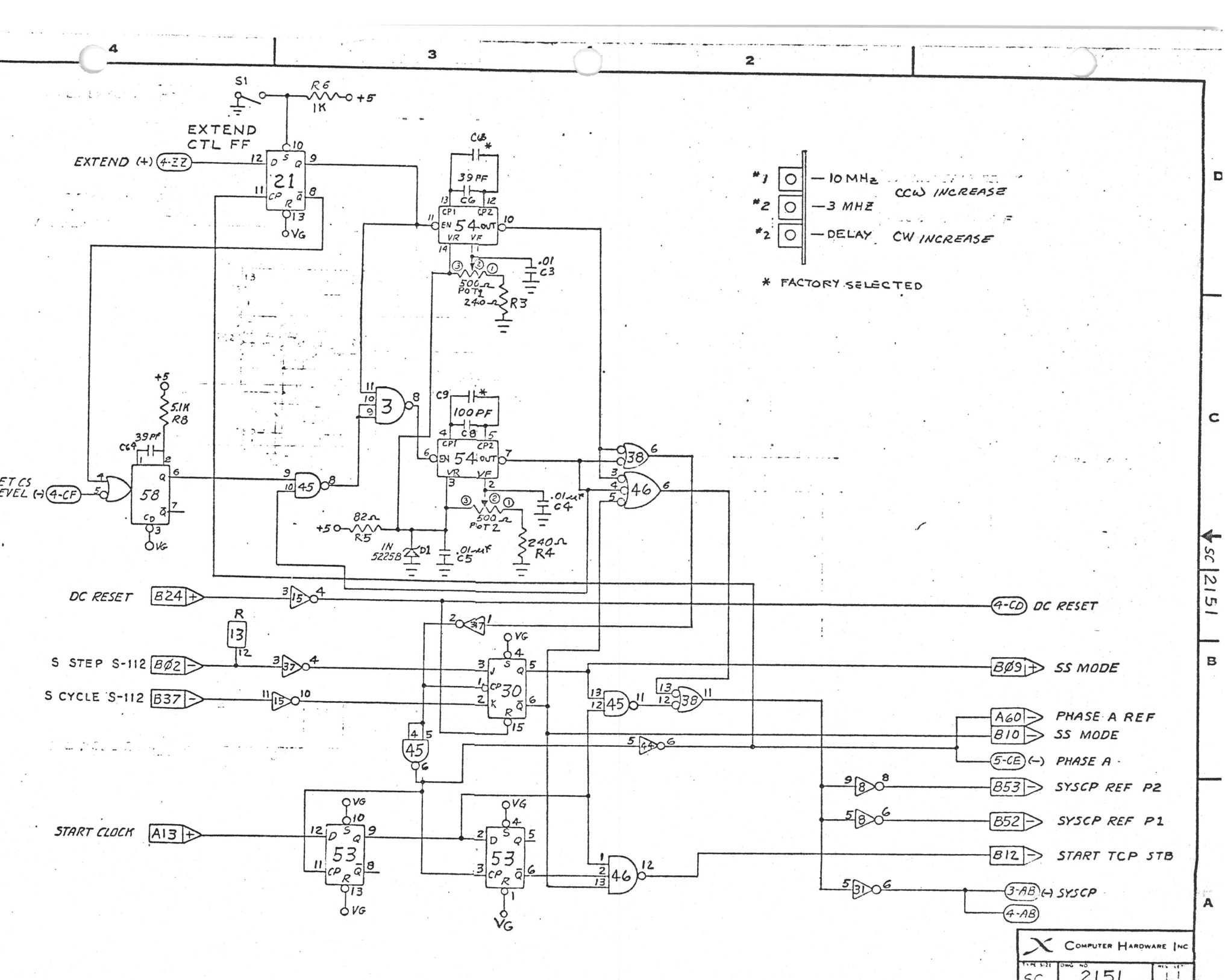
S1
R6
1K
+5
EXTEND
CTL FF
EXTEND (+) 4-ZZ
21
VG
C8 *
39 PF
54
.01
C3
500 POT 1
240
R3
*1 — 10 MHz CCW INCREASE
*2 — 3 MHz
*3 — DELAY CW INCREASE
* FACTORY SELECTED
5.1K
R8
39PF
C6
58
ET CS
EVEL (-) 4-CF
3
C9 *
100PF
C8
45
38
46
82
R5
IN 5225B
D1
.01 µF
C5
.01 µF
C4
500 POT 2
240
R4
DC RESET B24 +
4-CD DC RESET
R 13
S STEP S-112 BØ2 -
BØ9 + SS MODE
S CYCLE S-112 B37 -
37
30
A60 PHASE A REF
B10 SS MODE
5-CE (-) PHASE A
B53 SYSCP REF P2
B52 SYSCP REF P1
B12 START TCP STB
START CLOCK A13 +
53
53
3-AB (-) SYSCP
4-AB
31
Computer Hardware Inc
SC 2151

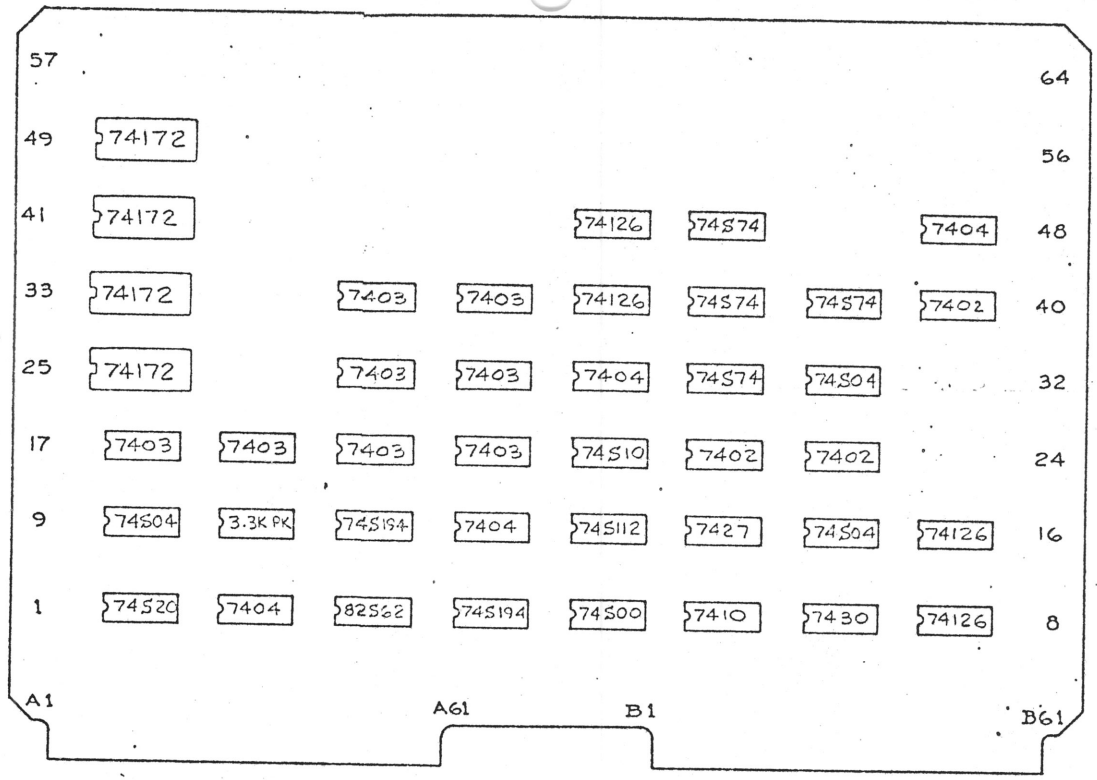

ASSEMBLY REVISION DATA (REF)

REV. LTR.	DESCRIPTION	REASON
A	1. ADD BUS BAR FROM POS 57 THRU 64 2. ADD 3 EA DIODES IN POS 52 PIN 1 TO 16, 2 TO 15 AND 3-14. 3. ADD 4 EA .01 uf CAP (SUB MIN) ACROSS IC 74172 BETWEEN PIN 12 & 24	
B	1. REMOVE RES. TERM NETWORK (898-43-2100) 2. ADD 1K RES AT IC #1	
C	1 ELEMINATE BUS BAR AND NO. OF .01uf CAP.	TO REFLECT USE OF MULTILAYER BOARD
D	ADD SHEET 3 OF 3 TO SHOW REWORK OF IC Ø7 PINS 4,5 & 6	PROVIDE FOR CYCLE-STEAL CYCLES CONCURRENT WITH SHIFT OPERATIONS

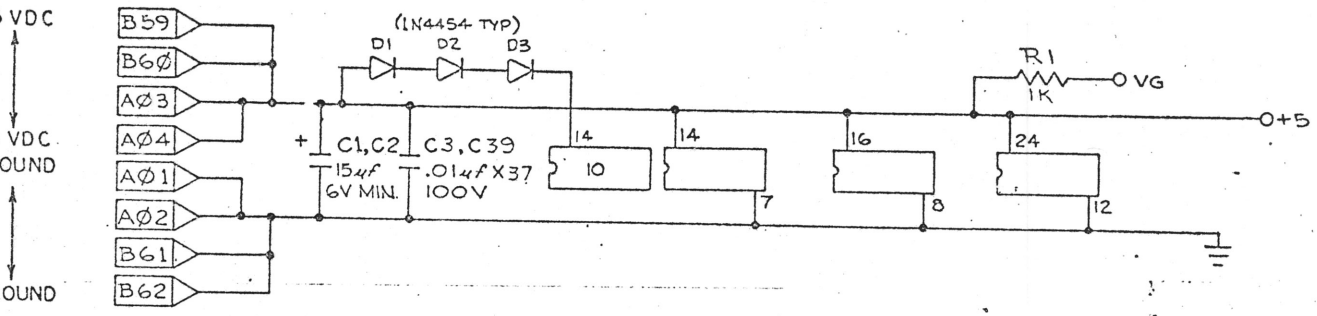

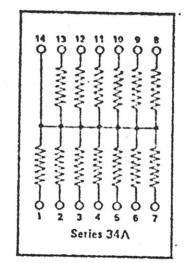

CONFIGURATION TABLE					
SCHEMATIC	REV	PC	REV	ASSY	REV
SC2148	NC	PC-2149	NC	AC-2150	NC
	A		NC		A
	A		NC		B
	B		A		C
	C		A		D

LAST USED TABLE	
CODE	REF DES.
EE	R1
	C52

FILE NUMBER

QTY REQD	PART OR FILE NUMBER	NOMENCLATURE	MFG PART NO. OR MATERIAL	MFG NAME OR SPECIFICATION	ITEM NO.

LIST OF MATERIALS

THIS PRINT CONTAINS PROPRIETARY INFORMATION. REPRODUCTION OF THIS PRINT OR ANY INFORMATION CONTAINED HEREIN OR MANUFACTURE OF ANY ARTICLE HEREFROM FOR DISCLOSURE TO OTHERS IS FORBIDDEN EXCEPT BY SPECIFIC WRITTEN PERMISSION FROM COMPUTER HARDWARE INC

UNLESS OTHERWISE SPECIFIED DIMENSIONS ARE IN INCHES
DIMENSION TOLERANCES
ANGULAR DIMENSION ± 1/2°
DECIMAL 2 PLACE ± .020
DECIMAL 3 PLACE ± .010
BREAK SHARP EDGES MAX
INSIDE CORNERS MAX
ALL MACHINE SURFACES
CHAMFER ALL THREADS 45° X 1 FULL THREAD (INTEXT)
DO NOT SCALE THIS PRINT

LETTER	DRN	CHK	DATE
C	[illegible]	[illegible]	[illegible]

CHANGE RECORD NO. [illegible]

TITLE: REGISTER, OP INDEX 8-15 -2131

X COMPUTER HARDWARE INC

DRAWN [illegible] 8-1-74 CHECKED [illegible]
DESIGN TW TYPE SIZE SC DWG NO. 2148 REV LET C
SCALE [illegible]

SC 2148

A

2096

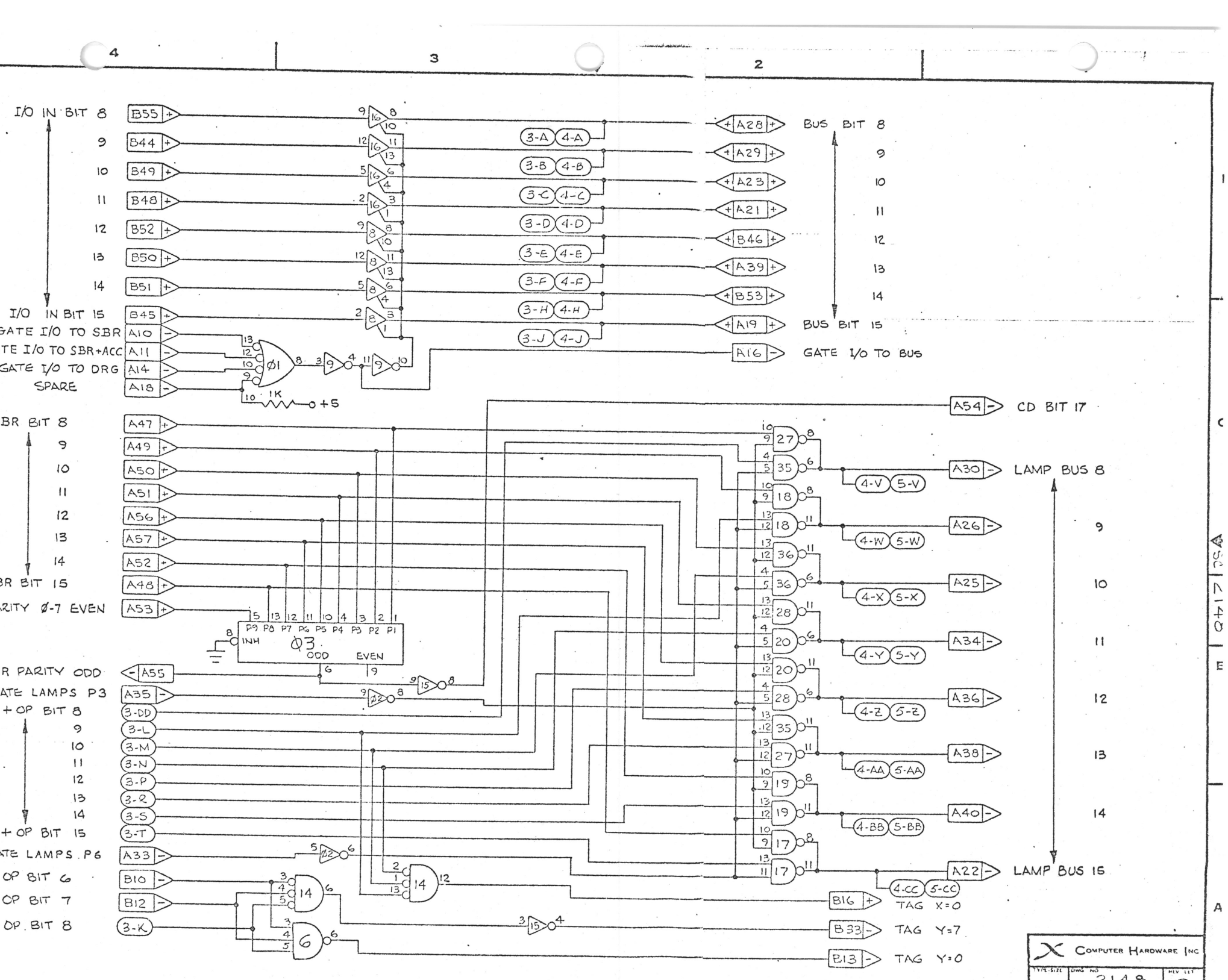

I/O IN BIT 8
I/O IN BIT 15
GATE I/O TO SBR
TE I/O TO SBR+ACC
GATE I/O TO DRG
SPARE
BR BIT 8
BR BIT 15
RITY Ø-7 EVEN
R PARITY ODD
ATE LAMPS P3
+ OP BIT 8
+ OP BIT 15
ATE LAMPS P6
OP BIT 6
OP BIT 7
OP BIT 8
BUS BIT 8
BUS BIT 15
GATE I/O TO BUS
CD BIT 17
LAMP BUS 8
LAMP BUS 15
TAG X=0
TAG Y=7
TAG Y=0
Ø1
Ø3
INH
ODD
EVEN
1K
+5
COMPUTER HARDWARE INC

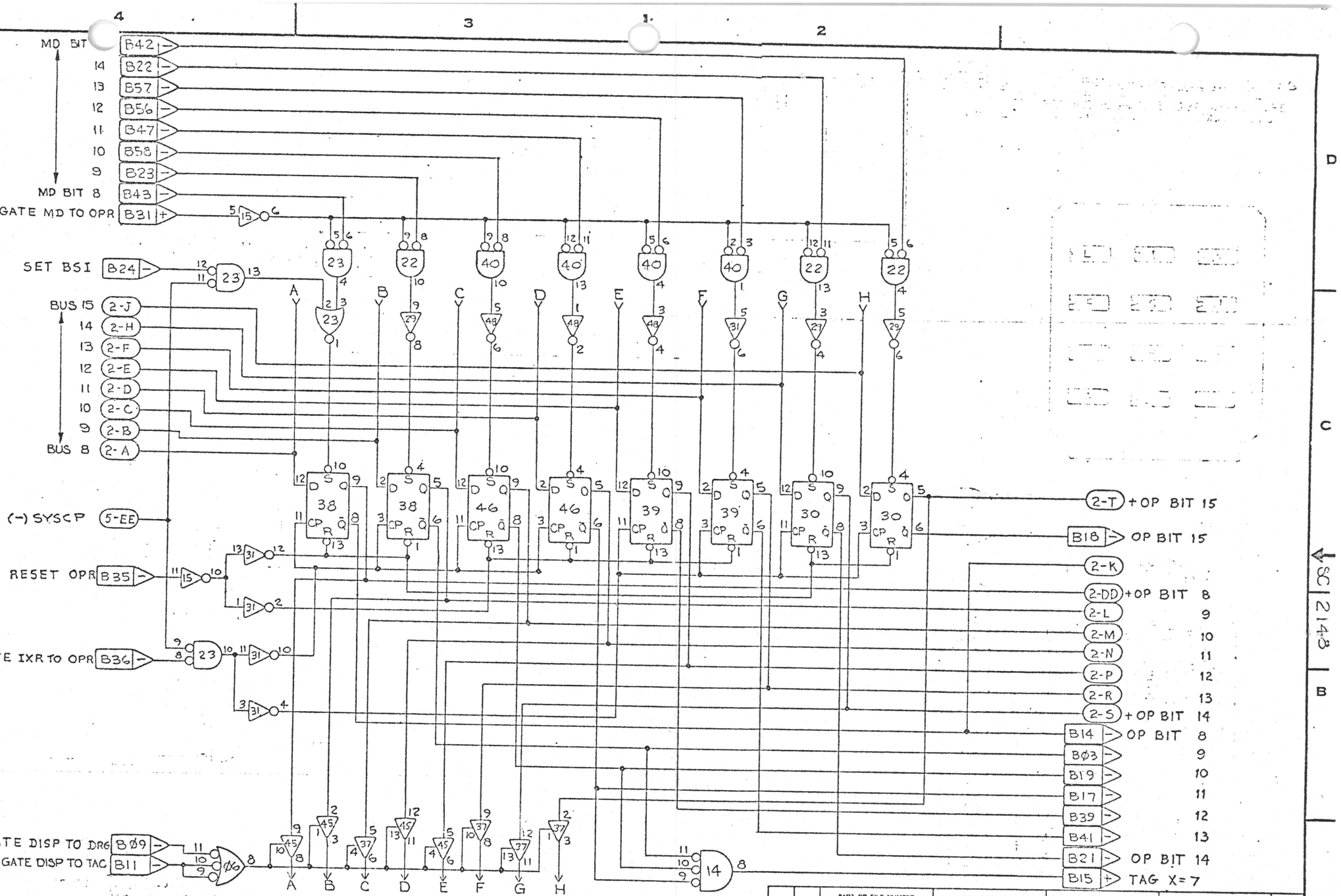

QTY. REQD	PART OR FILE NUMBER	NOMENCLATURE	MFG. PART NO. OR MATERIAL	MFG. NAME OR SPECIFICATION	ITEM NO

LIST OF MATERIALS

FILE NUMBER

THIS PRINT CONTAINS PROPRIETARY INFORMATION. REPRODUCTION OF THIS PRINT OR ANY INFORMATION CONTAINED HEREIN OR MANUFACTURE OF ANY ARTICLE HEREFROM, FOR DISCLOSURE TO OTHERS, IS FORBIDDEN, EXCEPT BY SPECIFIC WRITTEN PERMISSION FROM COMPUTER HARDWARE INC.

LETTER	DWN	CHK	DATE
CHANGE RECORD NO			

UNLESS OTHERWISE SPECIFIED DIMENSIONS ARE IN INCHES

DIMENSION TOLERANCES
ANGULAR DIMENSION ± ½°
DECIMAL 2 PLACE ± .020
DECIMAL 3 PLACE ± .010
±

BREAK SHARP EDGES MAX
INSIDE CORNERS MAX

ALL MACHINE SURFACES √

CHAMFER ALL THREADS 45° X 1 FULL THREAD (INTERNAL)

DO NOT SCALE THIS PRINT

TITLE

COMPUTER HARDWARE INC.

DRAWN	CHECKED
DESIGN	
SCALE	

TYPE SIZE SC | DWG NO 2148 | REV LET C

SC 2148

D C B A

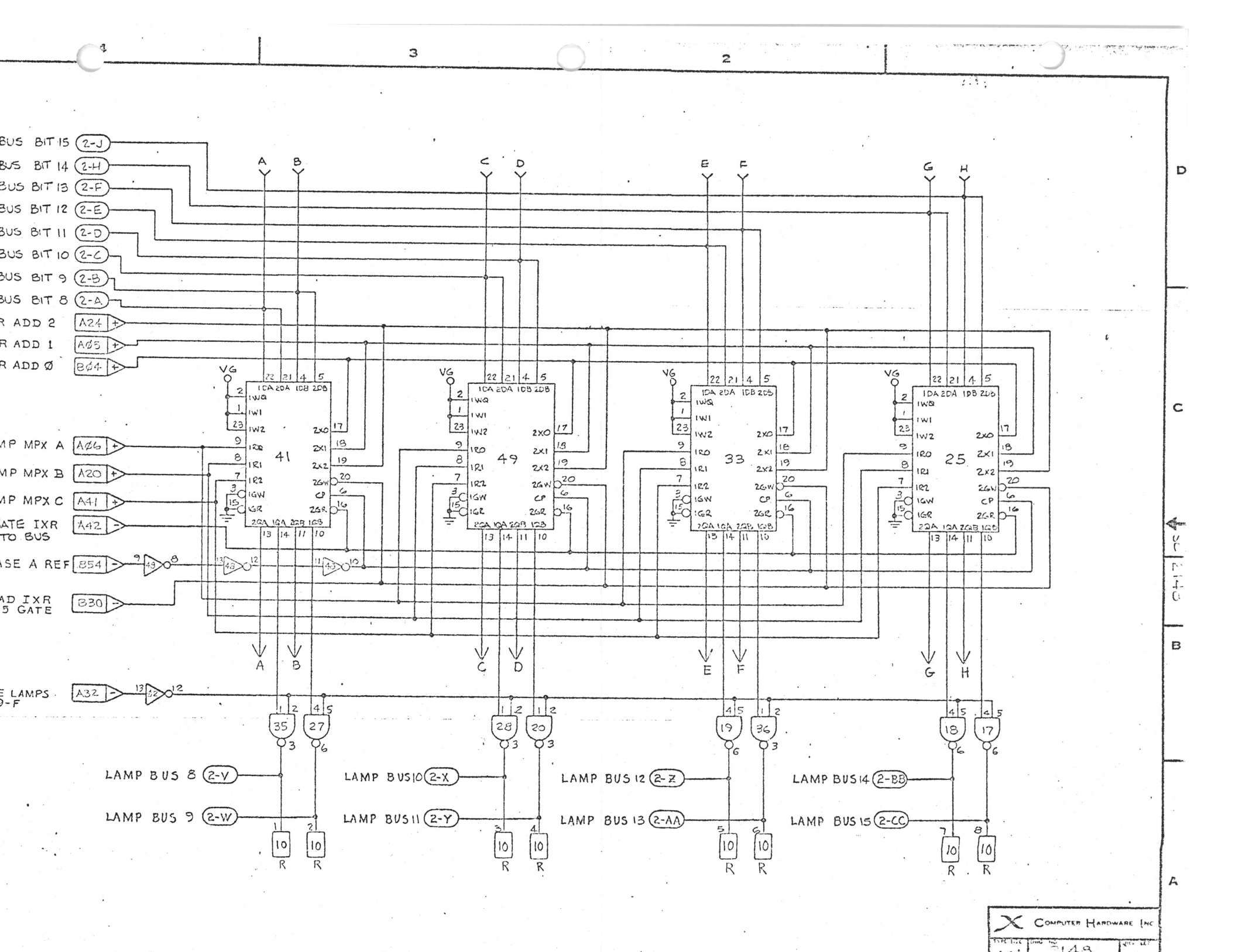

BUS BIT 15 2-J
BUS BIT 14 2-H
BUS BIT 13 2-F
BUS BIT 12 2-E
BUS BIT 11 2-D
BUS BIT 10 2-C
BUS BIT 9 2-B
BUS BIT 8 2-A
R ADD 2 A24
R ADD 1 AØ5
R ADD Ø BØ4
MP MPX A AØ6
MP MPX B A20
MP MPX C A41
ATE IXR TO BUS A42
ASE A REF B54
AD IXR 5 GATE B30
E LAMPS 9-F A32
41
49
33
25
LAMP BUS 8 2-V
LAMP BUS 9 2-W
LAMP BUS 10 2-X
LAMP BUS 11 2-Y
LAMP BUS 12 2-Z
LAMP BUS 13 2-AA
LAMP BUS 14 2-BB
LAMP BUS 15 2-CC
COMPUTER HARDWARE INC

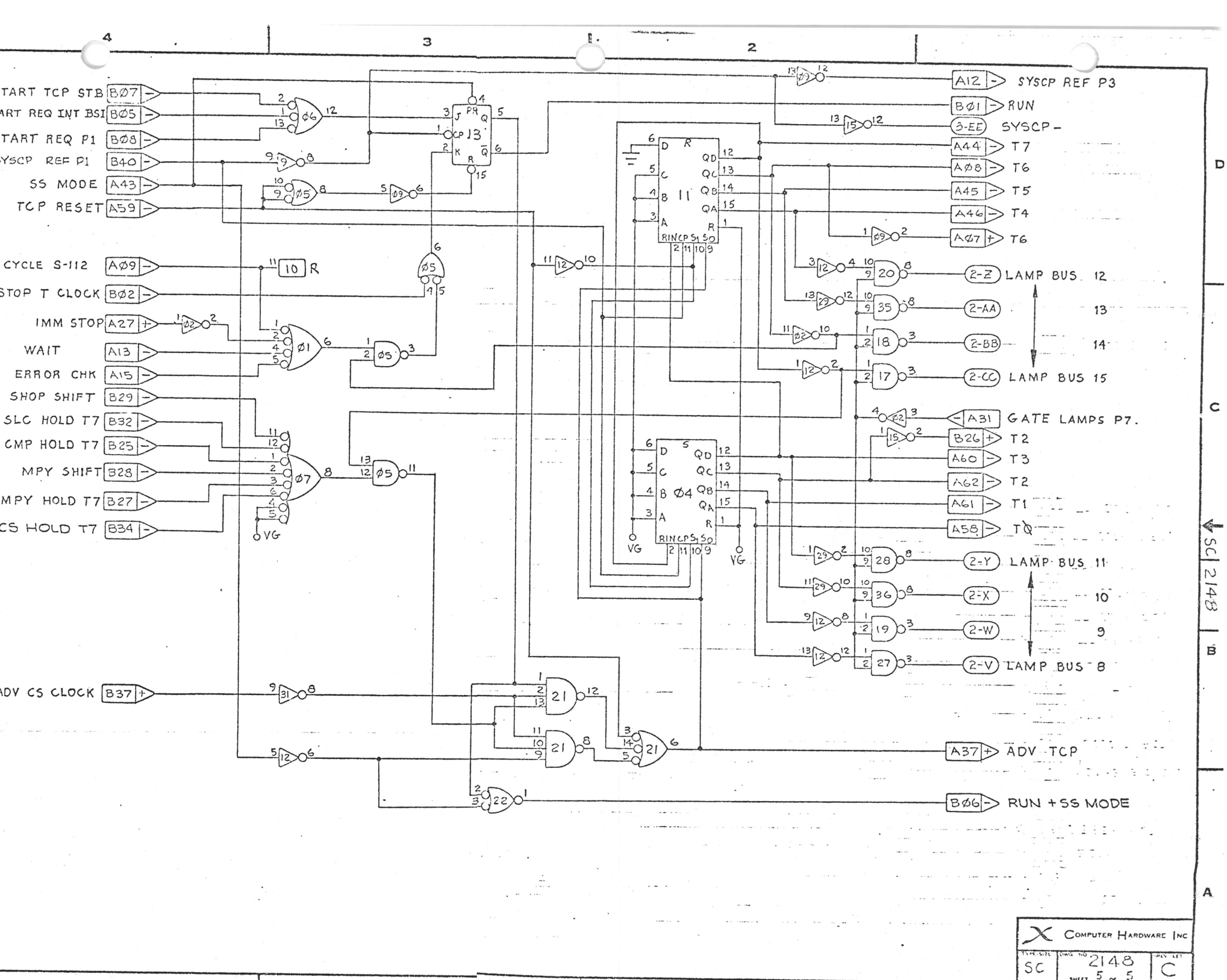
4
3
2
TART TCP STB B07
ART REQ INT BSI B05
TART REQ P1 B08
YSCP REF P1 B40
SS MODE A43
TCP RESET A59
CYCLE S-112 A09
STOP T CLOCK B02
IMM STOP A27 +
WAIT A13
ERROR CHK A15
SHOP SHIFT B29
SLC HOLD T7 B32
CMP HOLD T7 B25
MPY SHIFT B28
MPY HOLD T7 B27
CS HOLD T7 B34
ADV CS CLOCK B37 +
VG
A12 SYSCP REF P3
B01 RUN
3-EE SYSCP -
A44 T7
A08 T6
A45 T5
A46 T4
A07 + T6
2-Z LAMP BUS 12
2-AA 13
2-BB 14
2-CC LAMP BUS 15
A31 GATE LAMPS P7.
B26 + T2
A60 T3
A62 T2
A61 T1
A58 T0
2-Y LAMP BUS 11
2-X 10
2-W 9
2-V LAMP BUS 8
A37 + ADV TCP
B06 RUN + SS MODE
D
C
B
A
SC 2148
COMPUTER HARDWARE INC
SC
2148
SHEET 5 OF 5
C

NOTES:
1- DELETED.

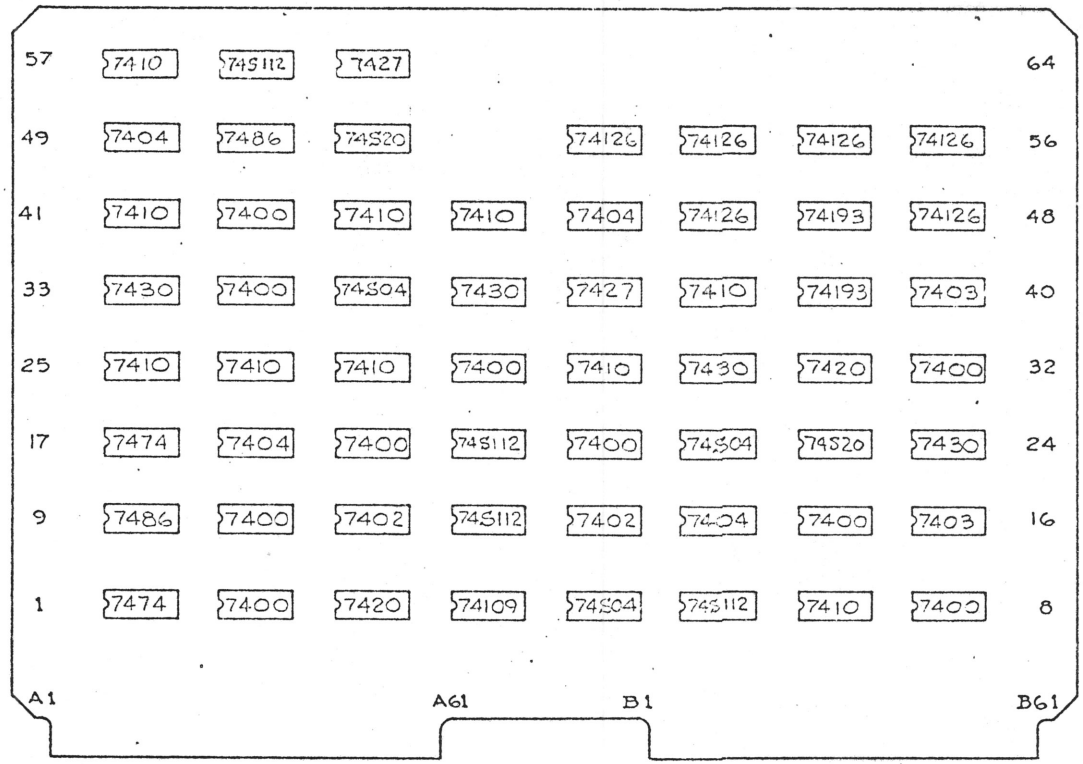

ASSEMBLY REVISION DATA (REF)

REV. LTR.	DESCRIPTION	REASON
A	IC POS 23 74S20 WAS 7420	DESIGN CHANGE
C	REMOVED 8 BUSBARS & IC .01µf CAP IMPLEMENT USE OF REV A PC CARD	INCORPORATE MULTILAYER PC BOARD
D	CORRECT LAYOUT ERRORS ON REV A PC CARD	
E	IMPLEMENT USE OF REV B PC CARD.	
F	ADD SHEET 3 OF 3 TO SHOW ADDITIONAL CIRCUIT AT POSITION 59	[illegible]
G	CORRECT DRAFTING ERROR. IC AT POS 59 WAS 7410	
H	ADDED IC IN POS 58	50 "END OP" MAY BE PROPERLY DETECTED
J	ADDED WIRE OMITTED ON H CHG.	
K	REVISED AND ADDED ADDITIONAL CIRCUIT AT POS 59 TO CORRECT ERROR IN RESET OF CARRY INDICATOR DURING SHIFT LEFT AND COUNT OPERATION.	

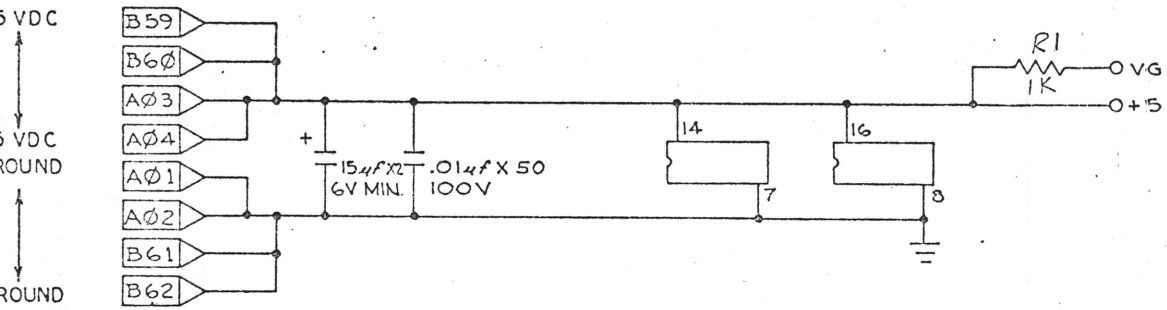

CONFIGURATION TABLE					
SC-2129		PC-2130		AC-2131	
REV	NC	REV	NC	REV	NC
	F		B		H
	F		B		J
	G		B		K

CONFIGURATION TABLE					
SCHEMATIC	REV	PC	REV	ASSY	REV
~~SC-2129~~	~~NC~~	PC-2130	NC	AC-2131	NC
SC-2129	NC1	PC-2130	NC	AC-2131	A
SC-2129	A	PC-2130	NC	AC-2131	B
SC-2129	B	PC-2130	A	AC-2131	C
SC-2129	C	PC-2130	A	AC-2131	D
SC-2129	C	PC-2130	B	AC-2131	E
SC-2129	D	PC-2130	B	AC-2131	F
SC-2129	E	PC-2130	B	AC-2131	G

LAST USED TABLE

CODE	REF. DES.
	R2
	C52

FILE NUMBER

QTY REQD	PART OR FILE NUMBER	NOMENCLATURE	MFG PART NO OR MATERIAL	MFG NAME OR SPECIFICATION	ITEM NO

LIST OF MATERIALS

THIS PRINT CONTAINS PROPRIETARY INFORMATION. REPRODUCTION OF THIS PRINT OR ANY INFORMATION CONTAINED HEREIN OR MANUFACTURE OF ANY ARTICLE HEREFROM FOR DISCLOSURE TO OTHERS IS FORBIDDEN EXCEPT BY SPECIFIC WRITTEN PERMISSION FROM COMPUTER HARDWARE INC

UNLESS OTHERWISE SPECIFIED DIMENSIONS ARE IN INCHES
DIMENSION TOLERANCES
ANGULAR DIMENSION ± 1°
DECIMAL 2 PLACE ± .020
DECIMAL 3 PLACE ± .010
BREAK SHARP EDGES MAX
INSIDE CORNERS MAX
ALL MACHINE SURFACES
CHAMFER ALL THREADS 1 FULL THREAD ON & EXT

LETTER	DRN	CHK	DATE
G	HS		

TITLE: CONTROL, GENERAL ARITH -2131

X COMPUTER HARDWARE INC

DRAWN JDF 7-24-74 CHECKED
DESIGN ELR
SIZE SC DWG NO 2129 REV G

SC 2129 A 2096

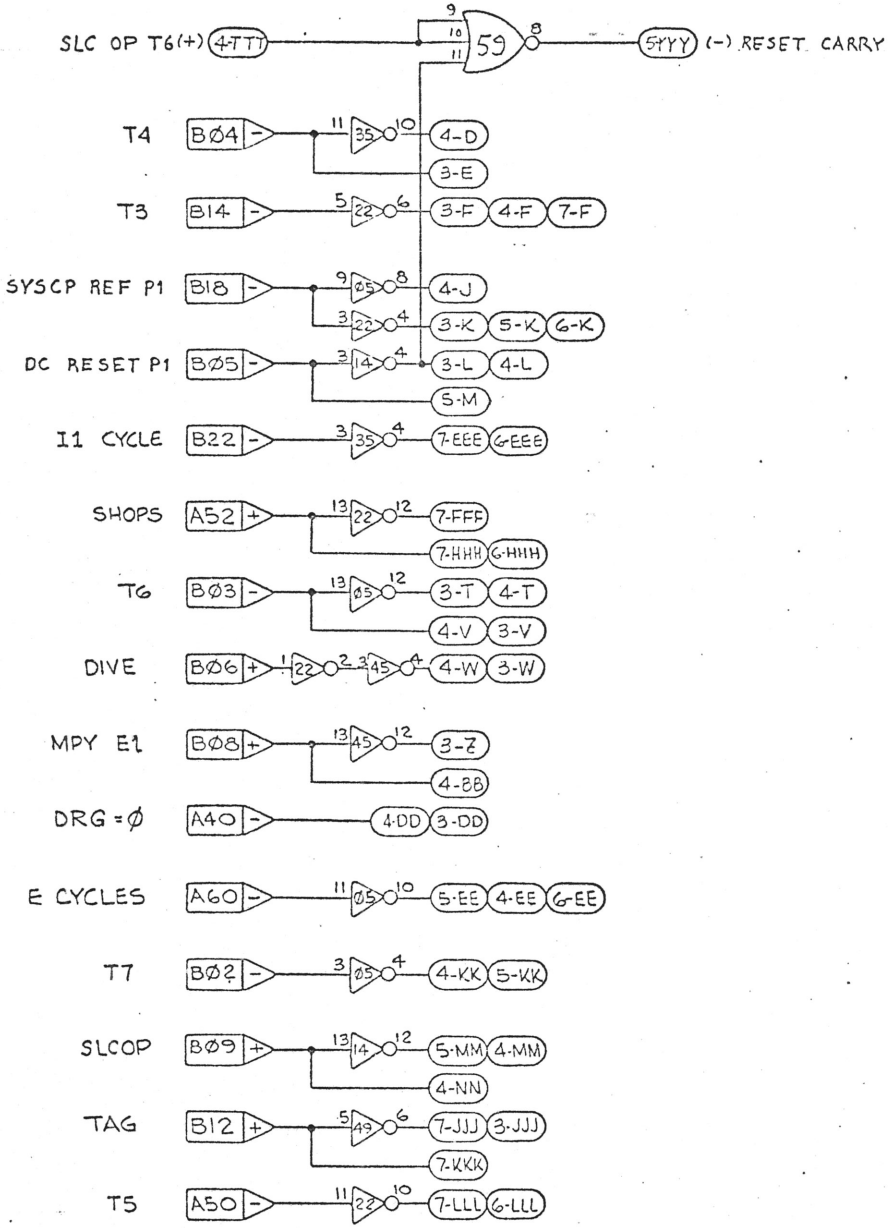

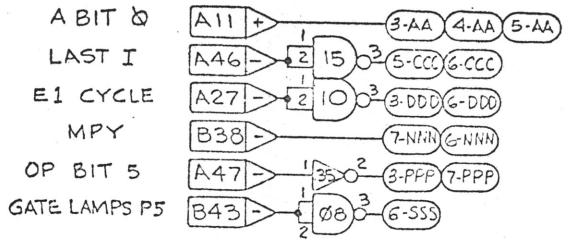

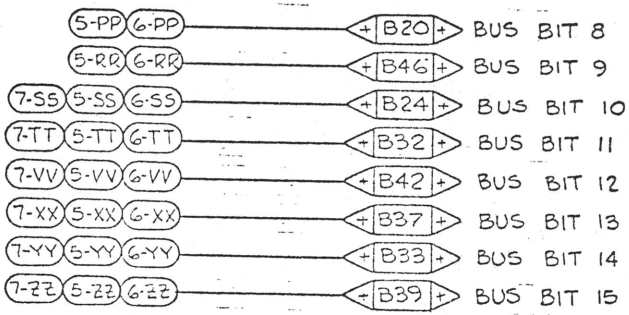

COMPUTER HARDWARE INC
2129

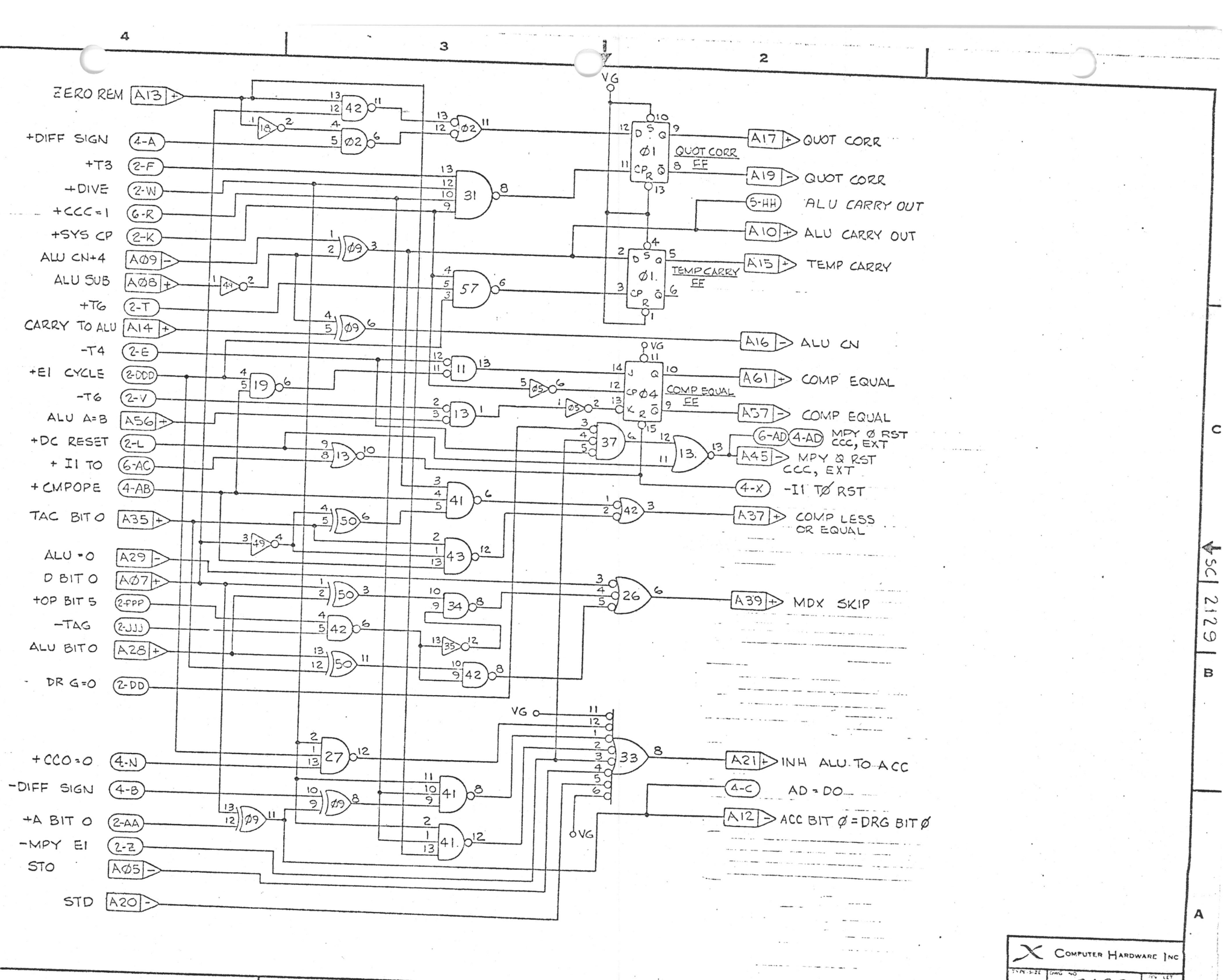
4
3
2
ZERO REM A13 +
+DIFF SIGN 4-A
+T3 2-F
+DIVE 2-W
+CCC=1 6-R
+SYS CP 2-K
ALU CN+4 AØ9 -
ALU SUB AØ8 +
+T6 2-T
CARRY TO ALU A14 +
-T4 2-E
+E1 CYCLE 2-DDD
-T6 2-V
ALU A=B A56 +
+DC RESET 2-L
+ I1 TO 6-AC
+CMPOPE 4-AB
TAC BIT 0 A35 +
ALU =0 A29 -
D BIT 0 AØ7 +
+OP BIT 5 2-FPP
-TAG 2-JJJ
ALU BIT 0 A28 +
DR G=0 2-DD
+CCO=0 4-N
-DIFF SIGN 4-B
+A BIT 0 2-AA
-MPY E1 2-Z
STO AØ5 -
STD A20 -
VG
QUOT CORR FF
A17 + QUOT CORR
A19 - QUOT CORR
5-HH ALU CARRY OUT
A10 + ALU CARRY OUT
TEMP CARRY FF
A15 + TEMP CARRY
A16 - ALU CN
COMP EQUAL FF
A61 + COMP EQUAL
A57 - COMP EQUAL
6-AD 4-AD MPY Ø RST CCC, EXT
A45 - MPY Ø RST CCC, EXT
4-X -I1 TØ RST
A37 + COMP LESS OR EQUAL
A39 + MDX SKIP
A21 + INH ALU TO ACC
4-C AD = DO
A12 - ACC BIT Ø = DRG BIT Ø
C
SC 2129
B
A
COMPUTER HARDWARE INC

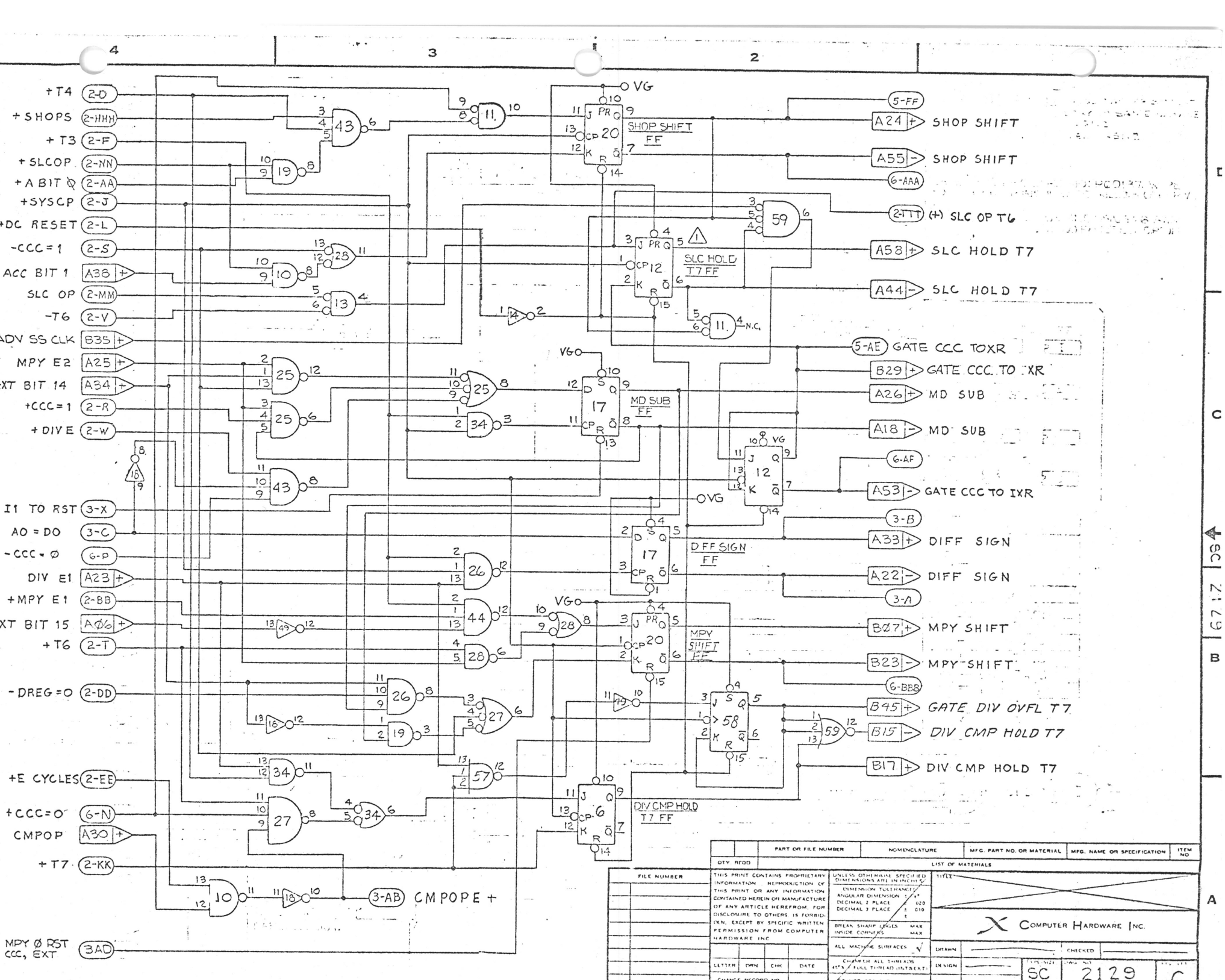
+T4 2-D
+SHOPS 2-HHH
+T3 2-F
+SLCOP 2-NN
+A BIT Ø 2-AA
+SYSCP 2-J
+DC RESET 2-L
-CCC=1 2-S
ACC BIT 1 A38 +
SLC OP 2-MM
-T6 2-V
ADV SS CLK B35 +
MPY E2 A25 +
XT BIT 14 A34 +
+CCC=1 2-R
+DIVE 2-W
I1 TO RST 3-X
AO=DO 3-C
-CCC=Ø 6-P
DIV E1 A23 +
+MPY E1 2-BB
XT BIT 15 AØ6 +
+T6 2-T
-DREG=0 2-DD
+E CYCLES 2-EE
+CCC=0 6-N
CMPOP A30 +
+T7 2-KK
MPY Ø RST CCC, EXT 3AD
3-AB CMPOPE+
VG
SHOP SHIFT FF
SLC HOLD T7 FF
MD SUB FF
DIFF SIGN FF
MPY SHIFT FF
DIV CMP HOLD T7 FF
5-FF
A24 + SHOP SHIFT
A55 - SHOP SHIFT
6-AAA
2-TTT (+) SLC OP T6
A58 + SLC HOLD T7
A44 - SLC HOLD T7
5-AE GATE CCC TOXR
B29 + GATE CCC TO XR
A26 + MD SUB
A18 - MD SUB
6-AF
A53 - GATE CCC TO IXR
3-B
A33 + DIFF SIGN
A22 - DIFF SIGN
3-A
BØ7 + MPY SHIFT
B23 - MPY SHIFT
6-BBB
B45 + GATE DIV OVFL T7
B15 - DIV CMP HOLD T7
B17 + DIV CMP HOLD T7
PART OR FILE NUMBER
NOMENCLATURE
MFG. PART NO. OR MATERIAL
MFG. NAME OR SPECIFICATION
ITEM NO
QTY REQD
LIST OF MATERIALS
FILE NUMBER
THIS PRINT CONTAINS PROPRIETARY INFORMATION. REPRODUCTION OF THIS PRINT OR ANY INFORMATION CONTAINED HEREIN OR MANUFACTURE OF ANY ARTICLE HEREFROM, FOR DISCLOSURE TO OTHERS IS FORBIDDEN, EXCEPT BY SPECIFIC WRITTEN PERMISSION FROM COMPUTER HARDWARE INC.
UNLESS OTHERWISE SPECIFIED DIMENSIONS ARE IN INCHES
DIMENSION TOLERANCES
ANGULAR DIMENSION ±°
DECIMAL 2 PLACE .020
DECIMAL 3 PLACE .010
BREAK SHARP EDGES MAX
INSIDE CORNERS MAX
ALL MACHINE SURFACES √
CHAMFER ALL THREADS 45° X FULL THREAD (INTACT)
LETTER DRN CHK DATE
CHANGE RECORD NO
TITLE
COMPUTER HARDWARE INC.
DRAWN
CHECKED
DESIGN
SIZE SC
DWG NO 2129
REV C
SC 2129 B
A
B
C
D

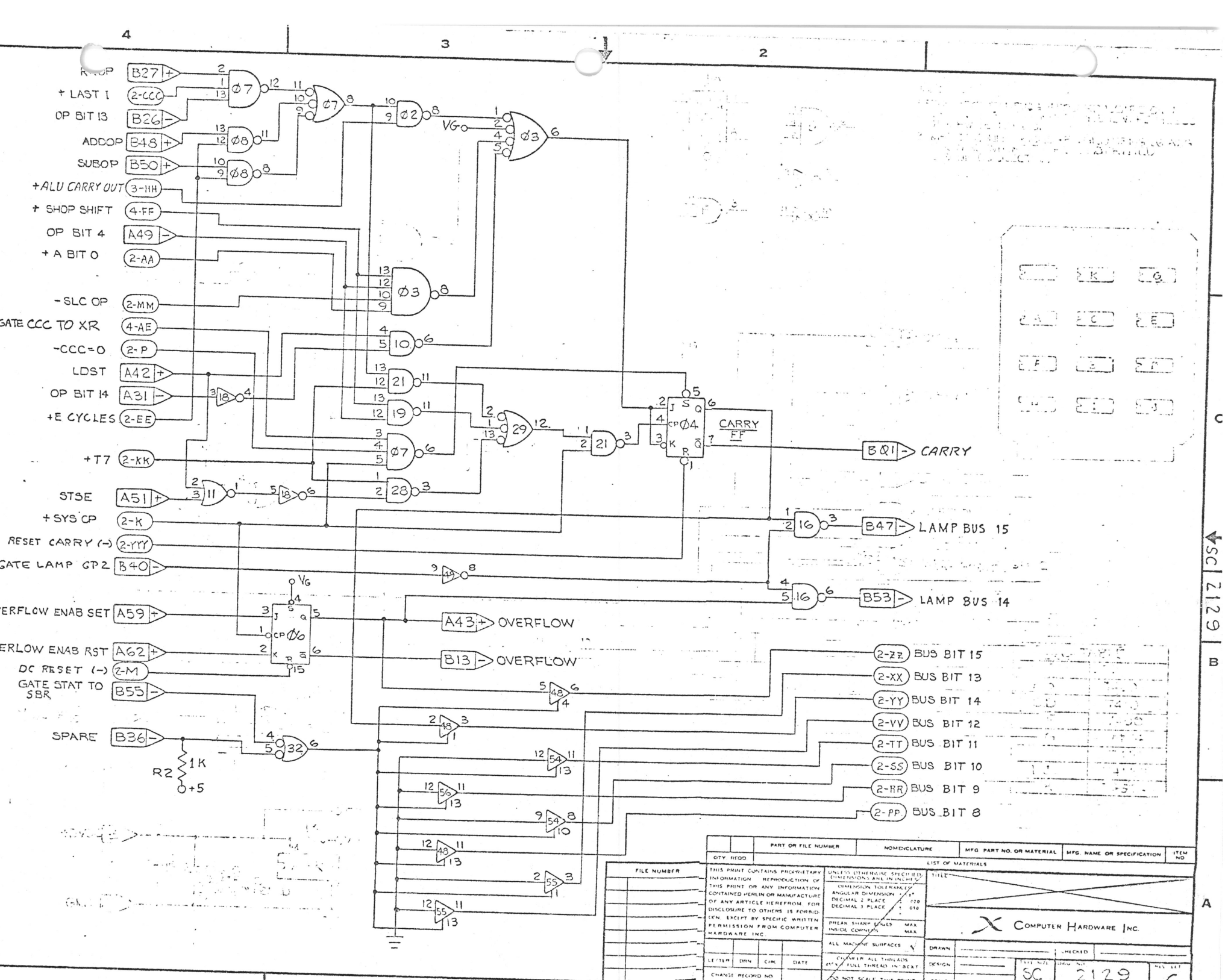

RAOP B27
+ LAST I 2-CCC
OP BIT 13 B26
ADDOP B48
SUBOP B50
+ALU CARRY OUT 3-HH
+ SHOP SHIFT 4-FF
OP BIT 4 A49
+ A BIT 0 2-AA
-SLC OP 2-MM
GATE CCC TO XR 4-AE
-CCC=0 2-P
LDST A42
OP BIT 14 A31
+E CYCLES 2-EE
+T7 2-KK
STSE A51
+SYS CP 2-K
RESET CARRY (-) 2-YYY
GATE LAMP GP2 B40
VERFLOW ENAB SET A59
VERLOW ENAB RST A62
DC RESET (-) 2-M
GATE STAT TO SBR B55
SPARE B36
R2 1K +5
VG
CARRY FF
BQ1 CARRY
B47 LAMP BUS 15
B53 LAMP BUS 14
A43 OVERFLOW
B13 OVERFLOW
2-ZZ BUS BIT 15
2-XX BUS BIT 13
2-YY BUS BIT 14
2-VV BUS BIT 12
2-TT BUS BIT 11
2-SS BUS BIT 10
2-RR BUS BIT 9
2-PP BUS BIT 8
PART OR FILE NUMBER
NOMENCLATURE
MFG. PART NO. OR MATERIAL
MFG. NAME OR SPECIFICATION
ITEM NO
QTY REQD
LIST OF MATERIALS
FILE NUMBER
THIS PRINT CONTAINS PROPRIETARY INFORMATION. REPRODUCTION OF THIS PRINT OR ANY INFORMATION CONTAINED HEREIN OR MANUFACTURE OF ANY ARTICLE HEREFROM FOR DISCLOSURE TO OTHERS IS FORBIDDEN. EXCEPT BY SPECIFIC WRITTEN PERMISSION FROM COMPUTER HARDWARE INC.
UNLESS OTHERWISE SPECIFIED DIMENSIONS ARE IN INCHES
DIMENSION TOLERANCES
ANGULAR DIMENSION
DECIMAL 2 PLACE ± .020
DECIMAL 3 PLACE ± .010
BREAK SHARP EDGES MAX
INSIDE CORNERS MAX
ALL MACHINE SURFACES
CHAMFER ALL THREADS
DO NOT SCALE THIS PRINT
TITLE
COMPUTER HARDWARE INC.
DRAWN
CHECKED
DESIGN
LETTER DRN CHK DATE
CHANGE RECORD NO
SC
2129
SC 2129

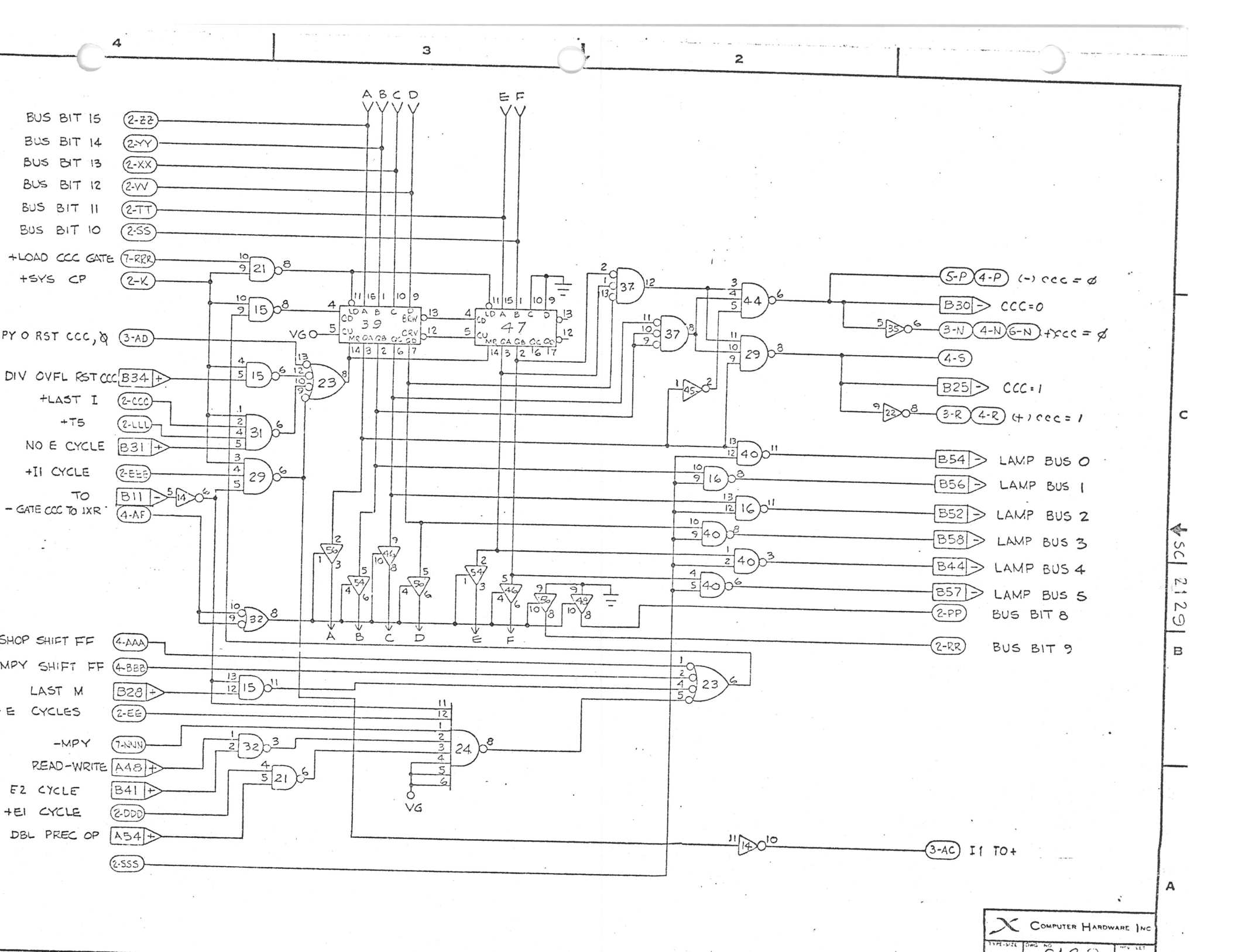
BUS BIT 15
BUS BIT 14
BUS BIT 13
BUS BIT 12
BUS BIT 11
BUS BIT 10
+LOAD CCC GATE
+SYS CP
PY 0 RST CCC, Ø
DIV OVFL RST CCC
+LAST I
+T5
NO E CYCLE
+I1 CYCLE
TO
- GATE CCC TO IXR
SHOP SHIFT FF
MPY SHIFT FF
LAST M
E CYCLES
-MPY
READ-WRITE
E2 CYCLE
+E1 CYCLE
DBL PREC OP
A B C D
E F
VG
(-) CCC = Ø
CCC=0
+CCC = Ø
CCC=1
(+) CCC = 1
LAMP BUS 0
LAMP BUS 1
LAMP BUS 2
LAMP BUS 3
LAMP BUS 4
LAMP BUS 5
BUS BIT 8
BUS BIT 9
I1 TO+
COMPUTER HARDWARE INC
SC 21129
A
B
C

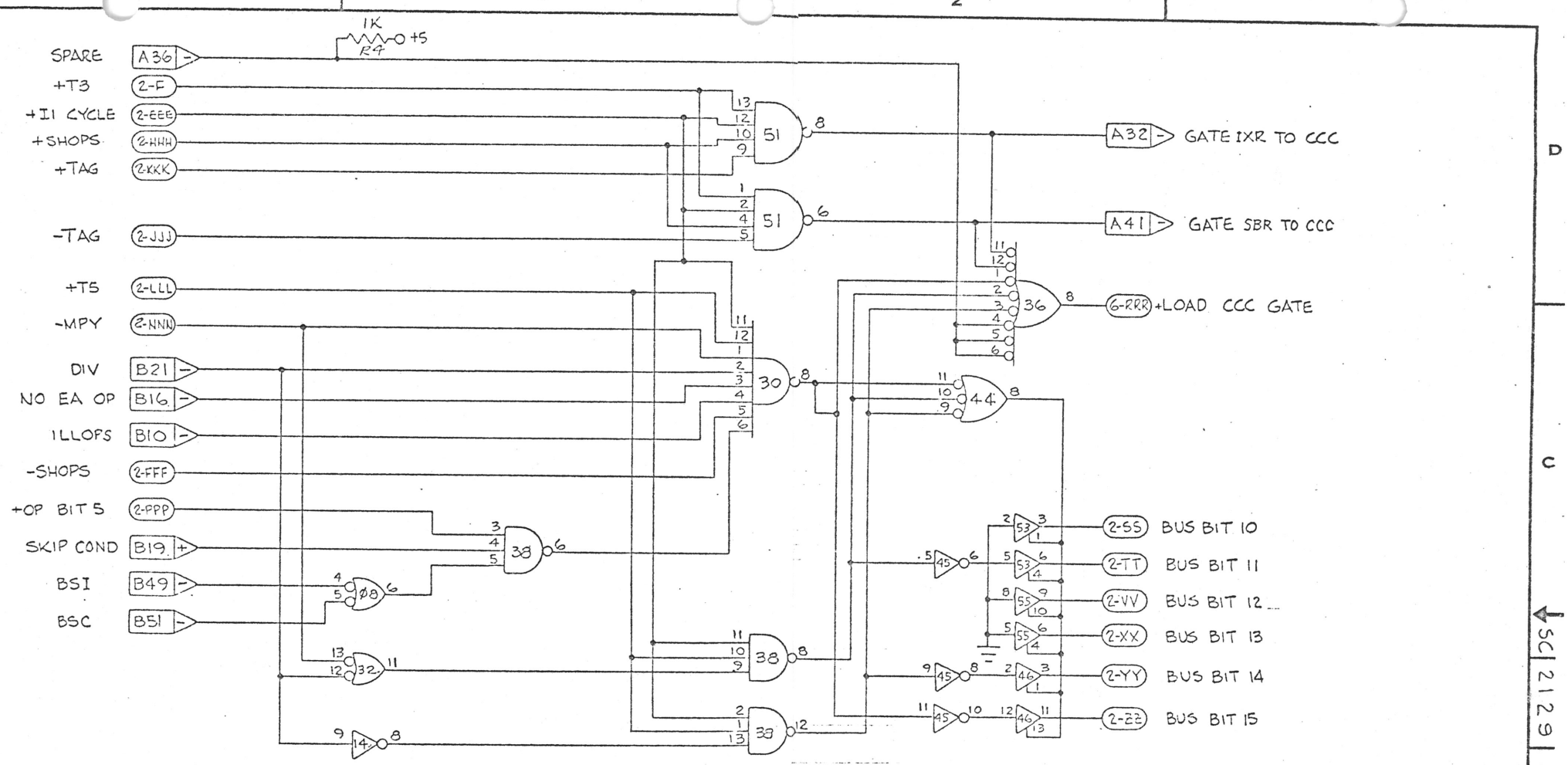

SC 2129

COMPUTER HARDWARE INC

TYPE-SIZE	DWG NO	REV LET
SC	2129	C

NOTES:
1-DELETED

2 INTERNAL CIRCUITRY

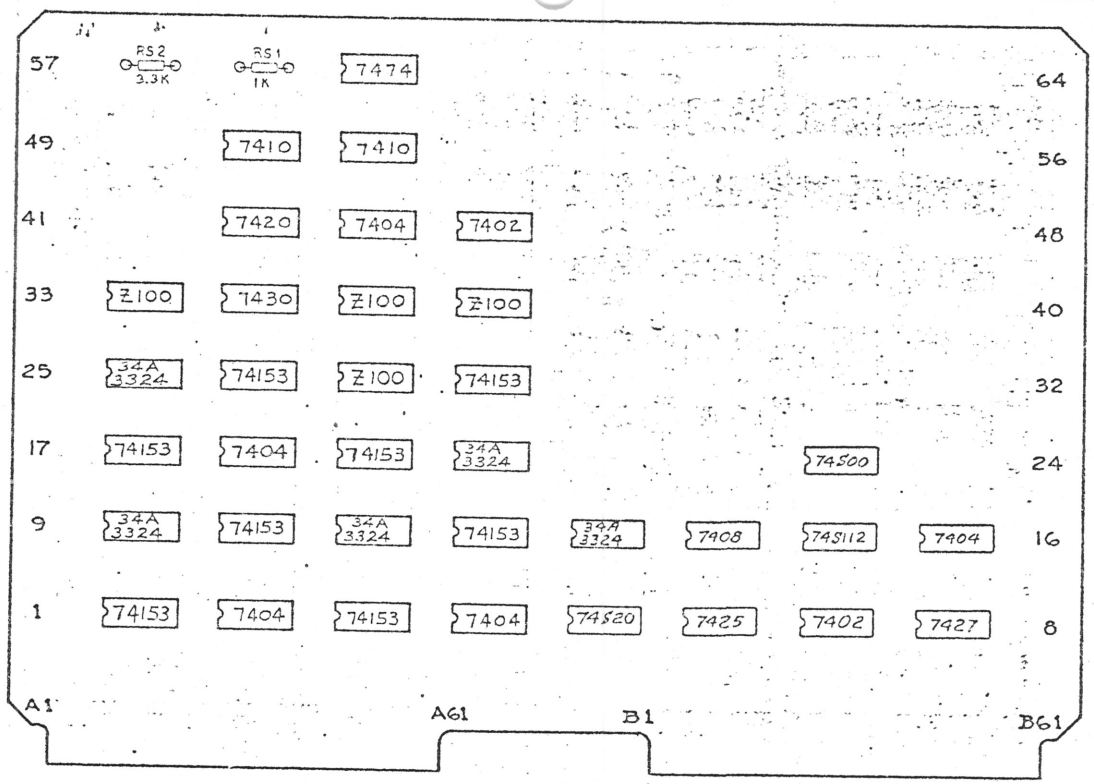

ASSEMBLY REVISION DATA (REF)		
REV. LTR.	DESCRIPTION	EFFECT.
B	REMOVED BUS BARS & 16 .01 CAP	TO REFLECT CHANGE TO MUTILAYER PC CARD
C	ADD SHEET 3 of 3 TO SHOW REWORK OF P.C. BOARD.	PREVENT EARLY ENAB OF SUP. CORE
E	REVISE SHEET 3 of 3 TO SHOW ADDITION OF CIRCUIT "LDX BIT 10"	

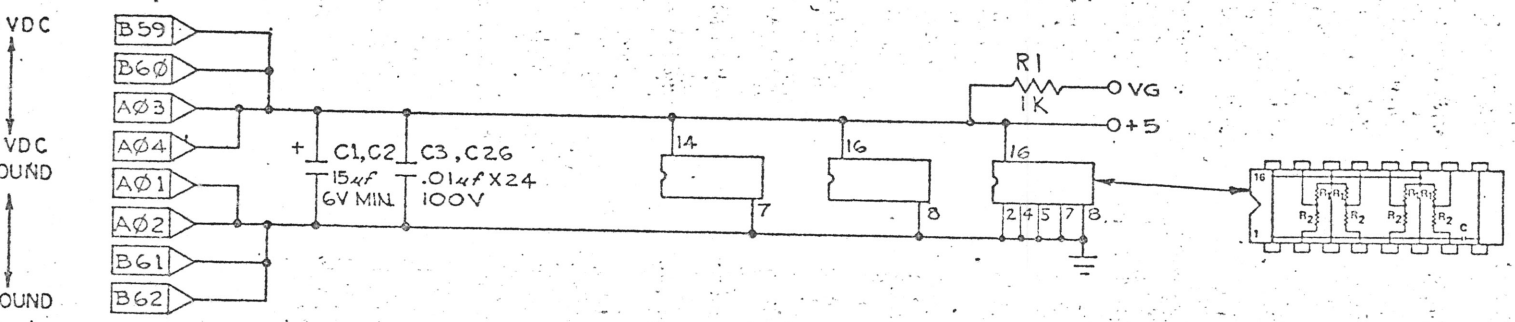

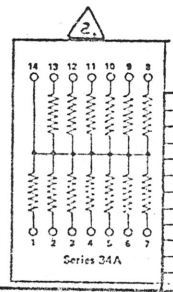

CONFIGURATION TABLE		
SC-2136	PC-2137	AC-2138
REV NC	REV NC	REV NC
NC	NC	NC
A	NC	A
B	A	B
C	A	C
D	A	D
E	A	E

LAST USED TABLE		FILE NUMBER
CODE	REF. DES.	
D	R2	
	C42	

QTY. REQD.	PART OR FILE NUMBER	NOMENCLATURE	MFG. PART NO. OR MATERIAL	MFG. NAME OR SPECIFICATION	ITEM NO

LIST OF MATERIALS

THIS PRINT CONTAINS PROPRIETARY INFORMATION. REPRODUCTION OF THIS PRINT OR ANY INFORMATION CONTAINED HEREIN OR MANUFACTURE OF ANY ARTICLE HEREFROM FOR DISCLOSURE TO OTHERS, IS FORBIDDEN EXCEPT BY SPECIFIC WRITTEN PERMISSION FROM COMPUTER HARDWARE INC

UNLESS OTHERWISE SPECIFIED DIMENSIONS ARE IN INCHES
DIMENSION TOLERANCES
ANGULAR DIMENSION ± 1/2°
DECIMAL 2 PLACE ± .010
DECIMAL 3 PLACE ± .010
BREAK SHARP EDGES MAX
INSIDE CORNERS MAX
ALL MACHINE SURFACES
CHAMFER ALL THREADS
AT X 1 FULL THREAD (INT & EXT)

LETTER	DRN	CHK	DATE
E	SS	MF	6-17-75

CHANGE RECORD NO 2136

TITLE
RECEIVER, INTERFACE-2131

X COMPUTER HARDWARE INC.

DRAWN SANDERS 2-24-74 CHECKED
DESIGN TW
SIZE SC DWG NO 2136 REV LET E

SC 2136 B

A 2096

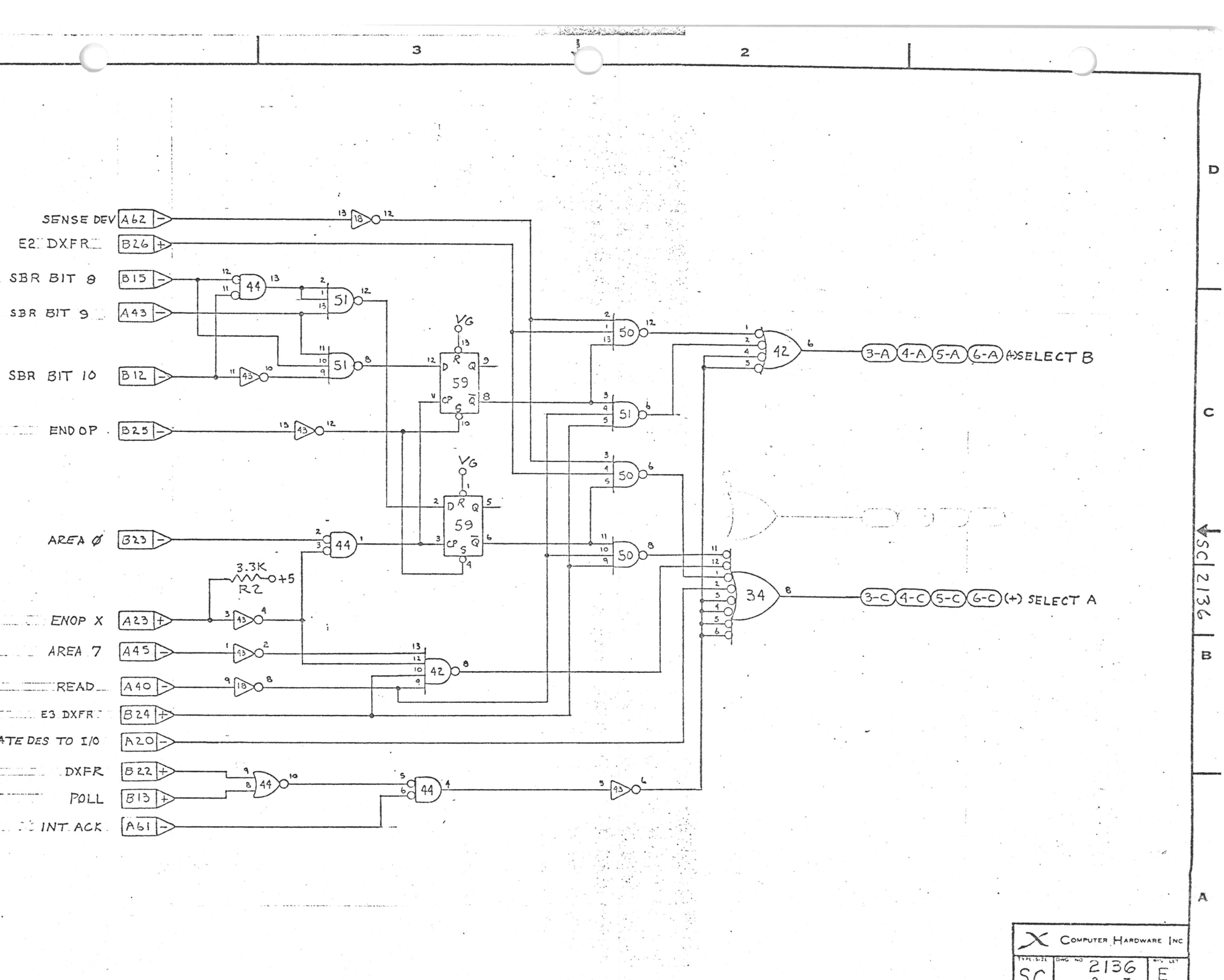
SENSE DEV A62
E2 DXFR B26
SBR BIT 8 B15
SBR BIT 9 A43
SBR BIT 10 B12
END OP B25
AREA Ø B23
ENOP X A23
AREA 7 A45
READ A40
E3 DXFR B24
ATE DES TO I/O A20
DXFR B22
POLL B13
INT ACK A61
3.3K
R2
+5
VG
59
44
51
50
42
34
43
18
3-A 4-A 5-A 6-A (+) SELECT B
3-C 4-C 5-C 6-C (+) SELECT A
SC 2136 B
COMPUTER HARDWARE INC
SC
2136
E

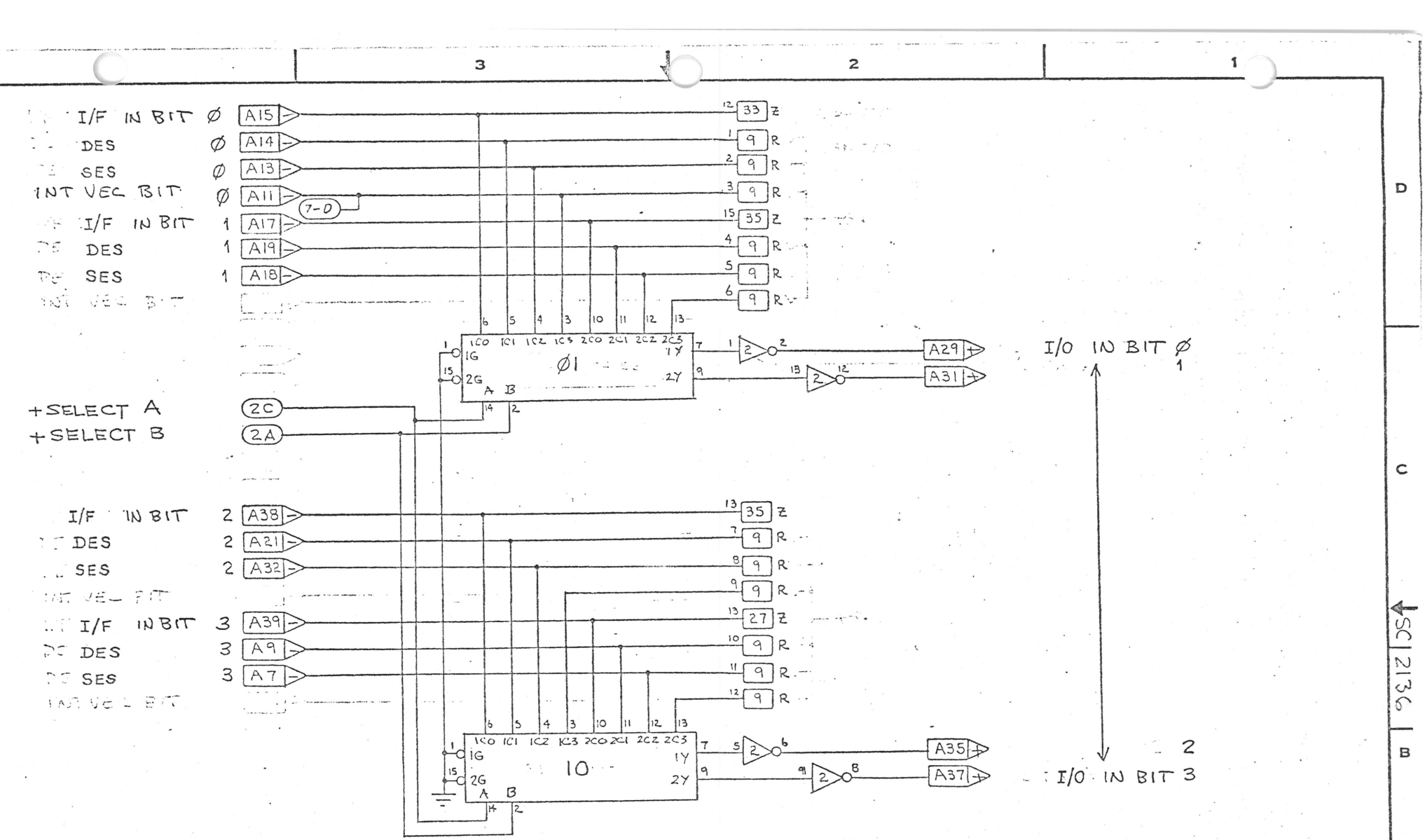

X COMPUTER HARDWARE INC			
TYPE-SIZE SC	DWG NO 2136 SHEET 3 OF 3	REV LET E	

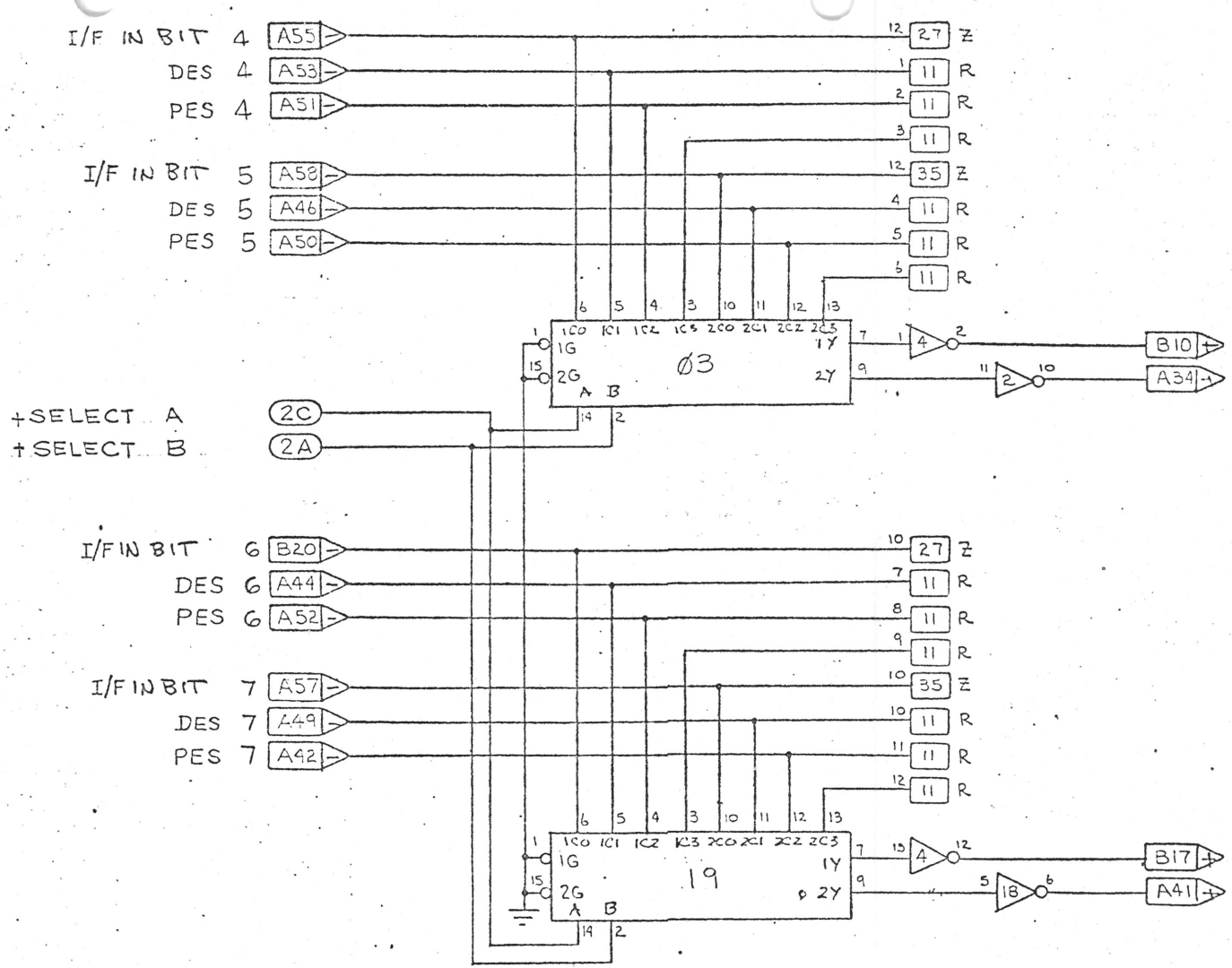

I/O IN BIT 4
5
6
I/O IN BIT 7

COMPUTER HARDWARE INC

TYPE DOC	DWG NO	REV
SC	2136	E

SHEET 4 OF 7

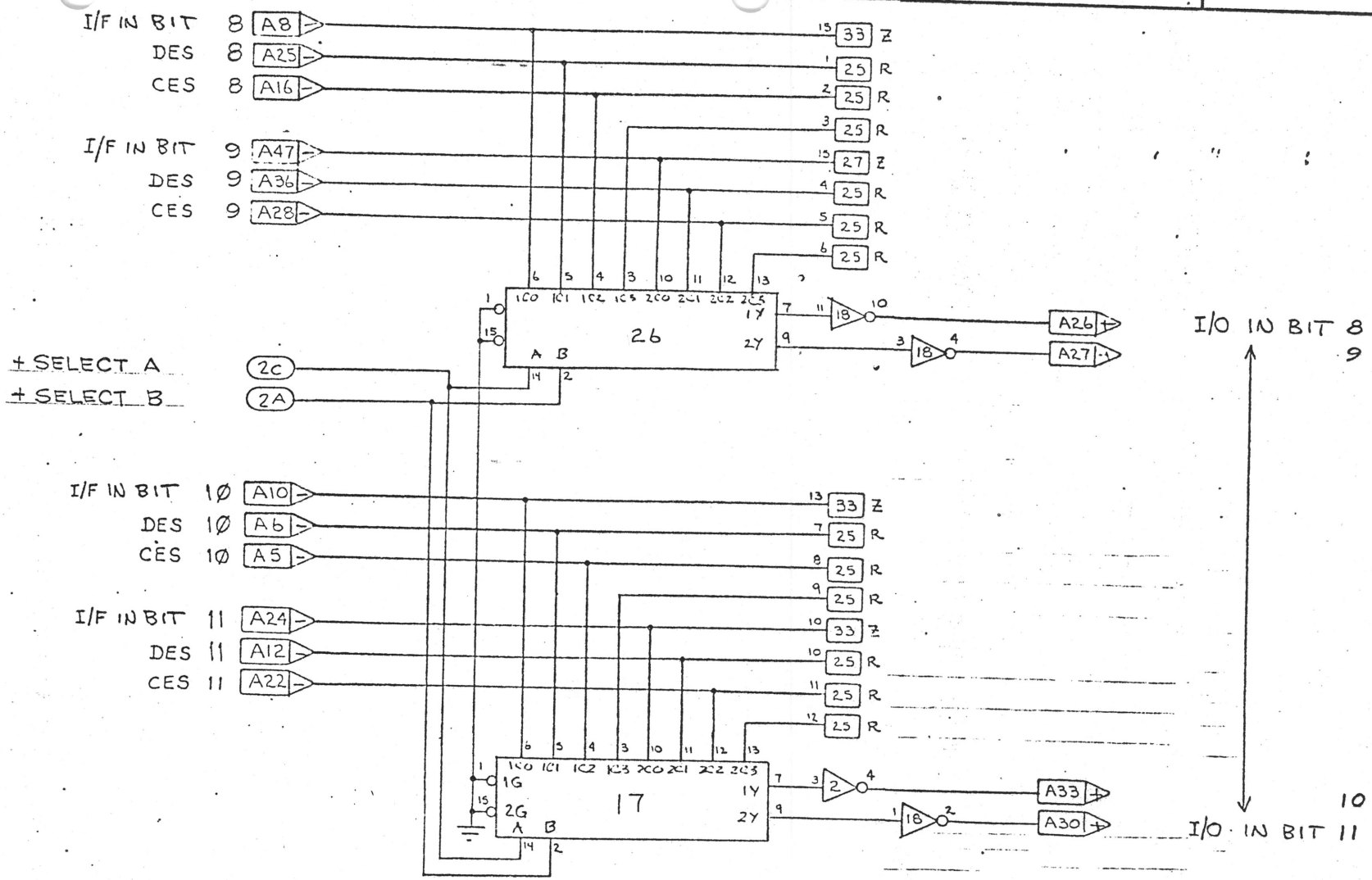

X COMPUTER HARDWARE INC

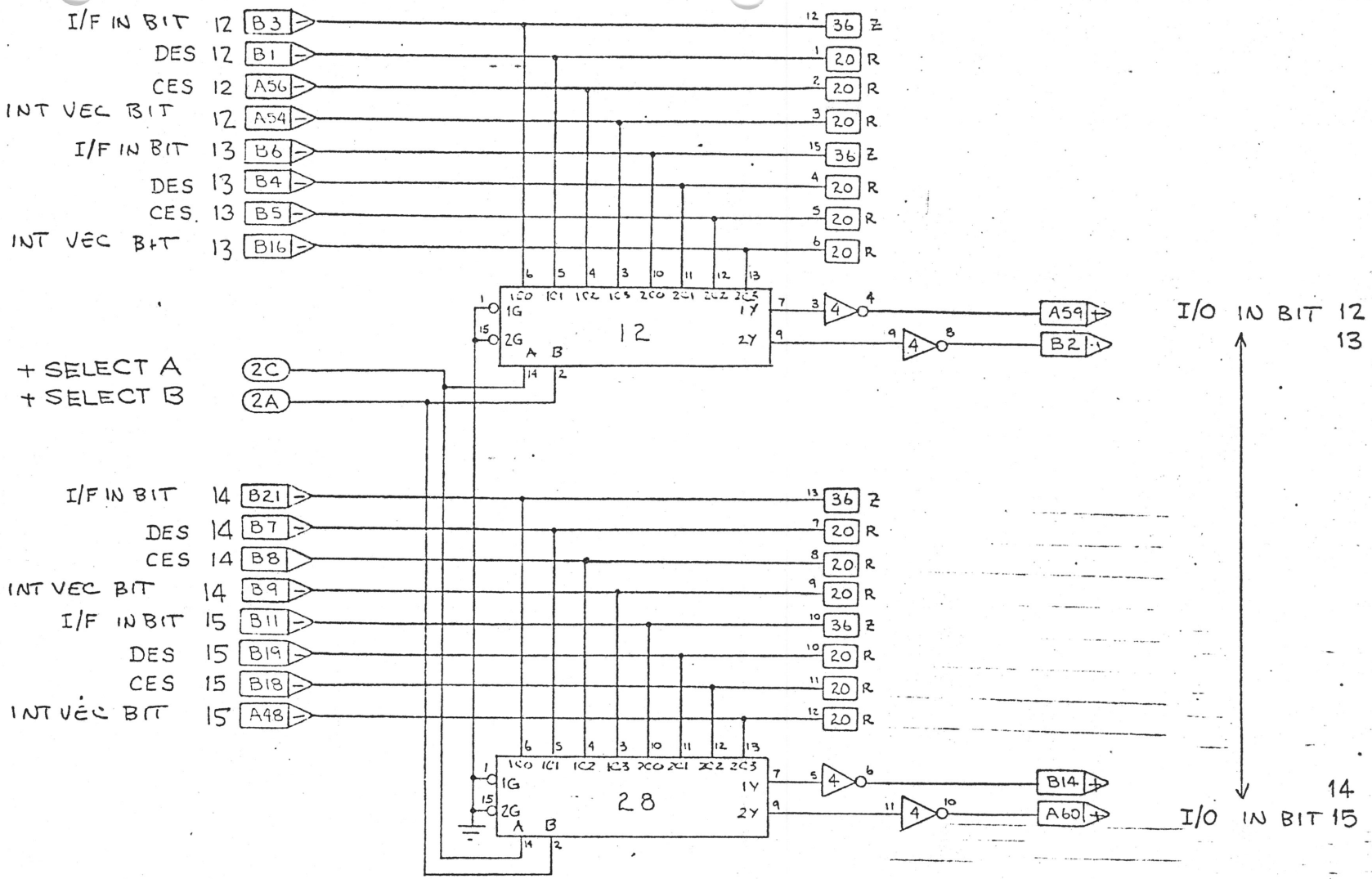
I/F IN BIT 12 B3
DES 12 B1
CES 12 A56
INT VEC BIT 12 A54
I/F IN BIT 13 B6
DES 13 B4
CES 13 B5
INT VEC BIT 13 B16
12
+ SELECT A 2C
+ SELECT B 2A
I/F IN BIT 14 B21
DES 14 B7
CES 14 B8
INT VEC BIT 14 B9
I/F IN BIT 15 B11
DES 15 B19
CES 15 B18
INT VEC BIT 15 A48
28
A59
B2
B14
A60
I/O IN BIT 12
13
14
I/O IN BIT 15

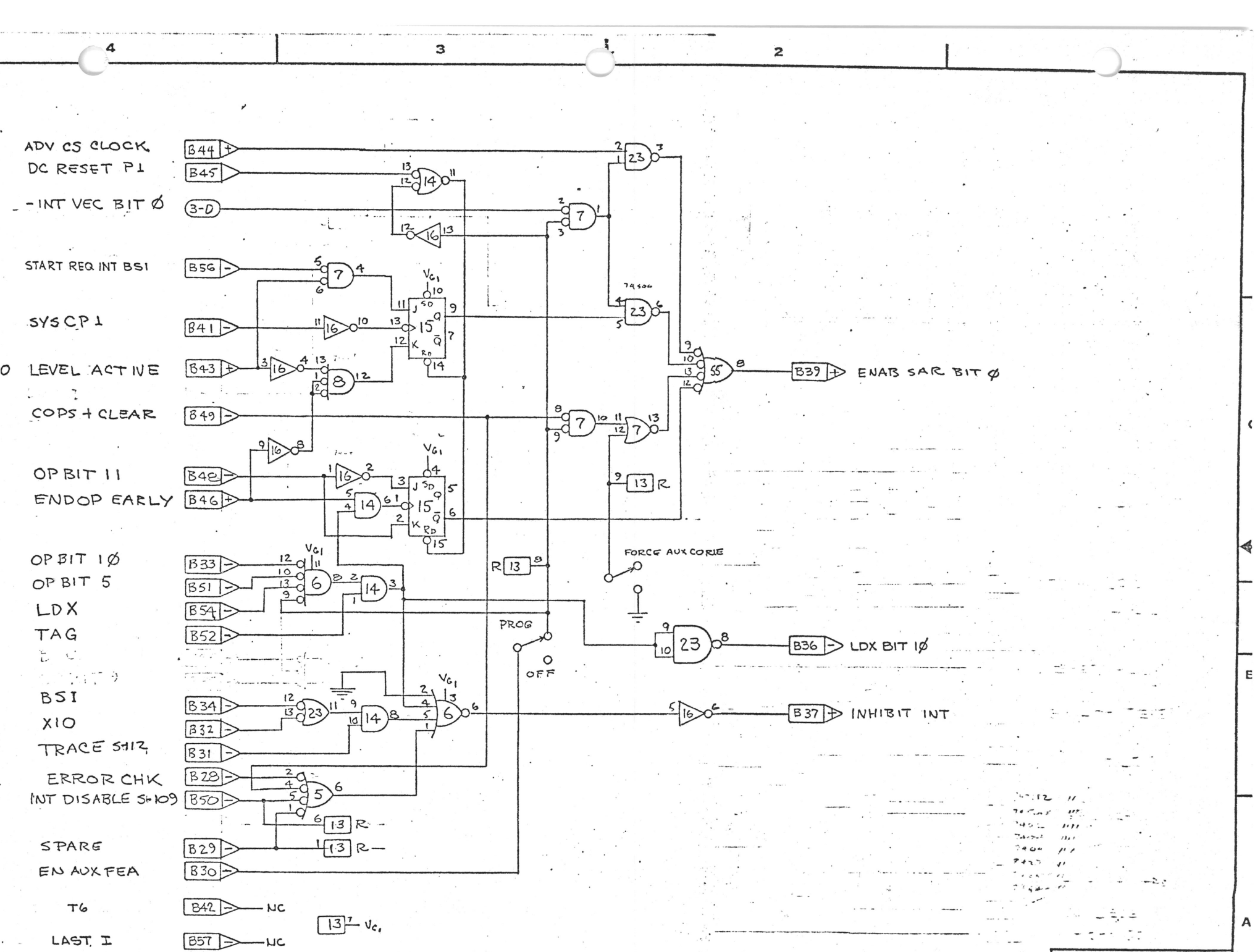

COMPUTER HARDWARE INC			
TYPE-SIZE	DWG NO		REV LET
SC	2136		F

NOTES:
1- DELETED

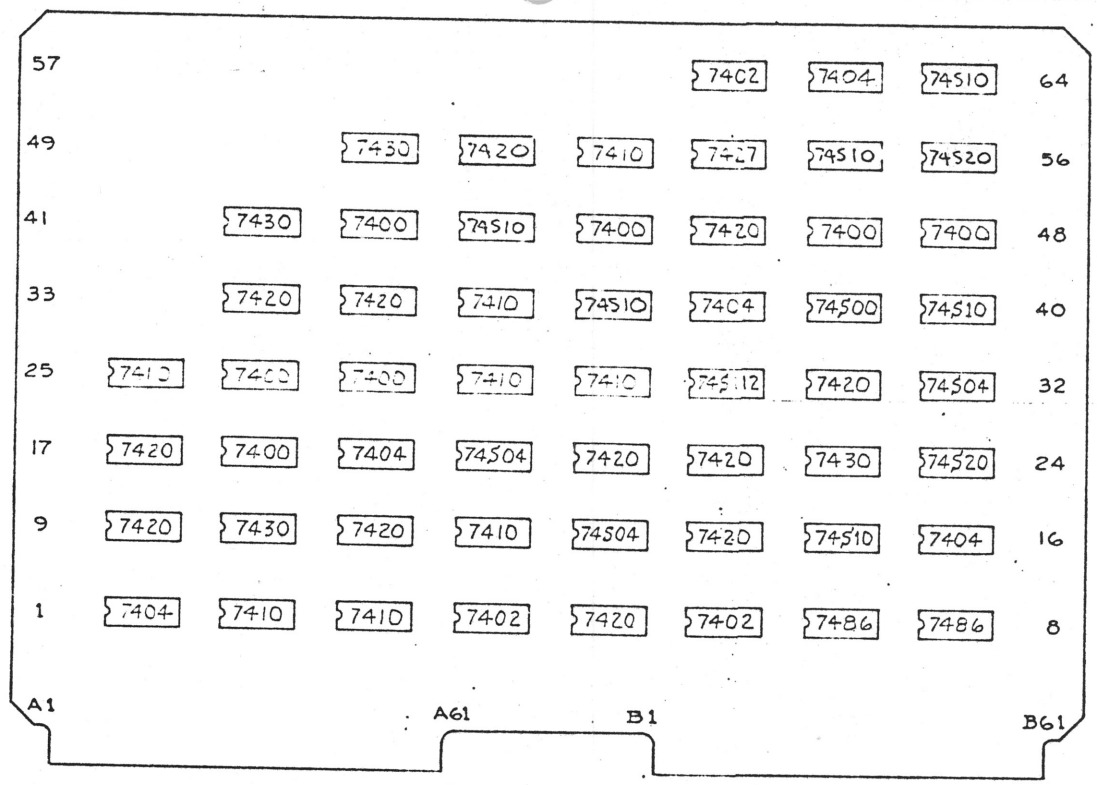

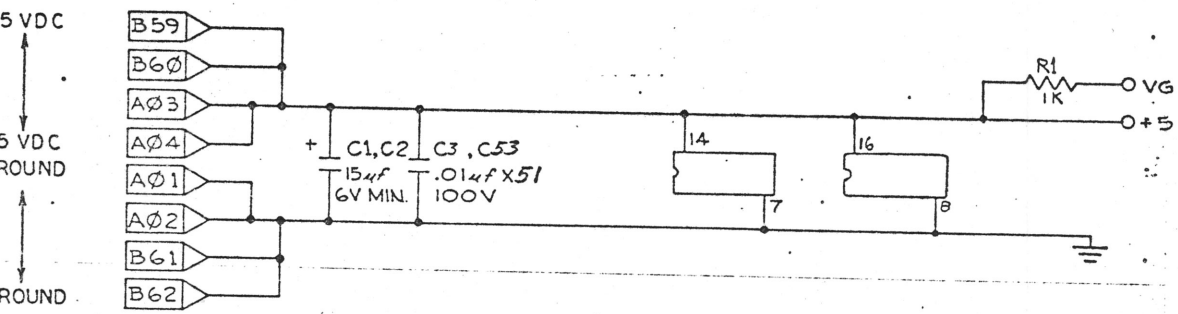

ASSEMBLY REVISION DATA (REF)		
REV. LTR.	DESCRIPTION	EFFECT.
D	INCORPORATION OF REV "A" PC CARD ELIMINATION OF BUSS BARS & IC CAP.	

CONFIGURATION TABLE					
SCHEMATIC	REV	PC	REV	ASSY	REV
~~SC 2133~~	NC	PC-2134	NC	AC-2135	NC
SC 2133	NC	"	NC	"	A
SC 2133	A	"	NC	"	B
"	B	"	NC	"	C
SC-2133	C	PC-2134	A	AC-2135	D

LAST USED TABLE	
CODE	REF DES
	R2
	C53

FILE NUMBER

QTY REQD	PART OR FILE NUMBER	NOMENCLATURE	MFG PART NO OR MATERIAL	MFG NAME OR SPECIFICATION	ITEM NO

LIST OF MATERIALS

TITLE: CONTROL, ARITH & REGISTER - 2131

COMPUTER HARDWARE INC
TCW 11-8-74

DRAWN: JDF 7-24-74
DESIGN: ELR
SC 2133 C1

SC 2133

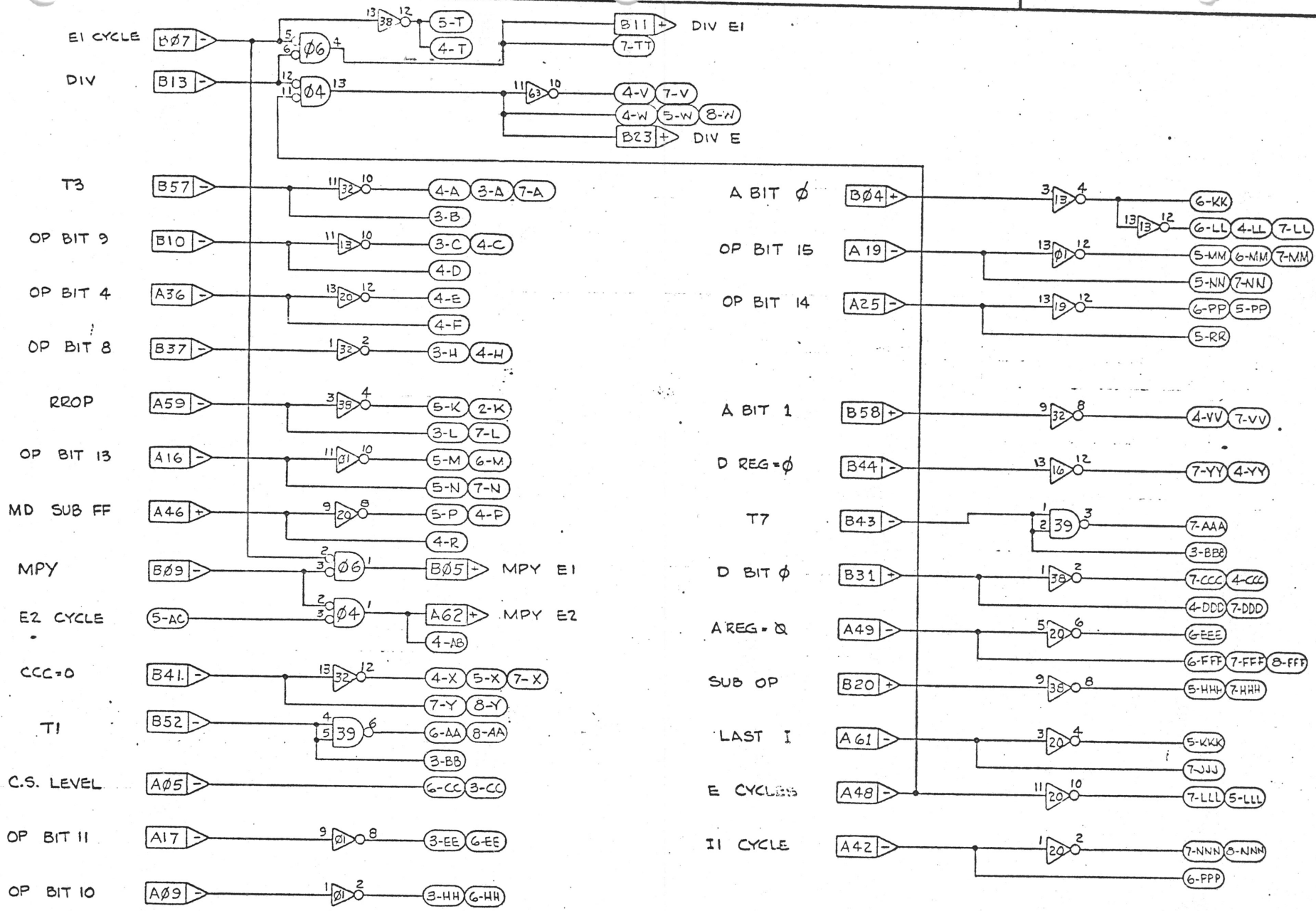
E1 CYCLE
B07 -
DIV
B13 -
T3
B57 -
OP BIT 9
B10 -
OP BIT 4
A36 -
OP BIT 8
B37 -
RROP
A59 -
OP BIT 13
A16 -
MD SUB FF
A46 +
MPY
B09 -
E2 CYCLE
5-AC
CCC=0
B41 -
T1
B52 -
C.S. LEVEL
A05 -
OP BIT 11
A17 -
OP BIT 10
A09 -
B11 + DIV E1
7-TT
B23 + DIV E
A BIT ∅
B04 +
OP BIT 15
A19 -
OP BIT 14
A25 -
A BIT 1
B58 +
D REG=∅
B44 -
T7
B43 -
D BIT ∅
B31 +
A REG=Q
A49 -
SUB OP
B20 +
LAST I
A61 -
E CYCLE
A48 -
I1 CYCLE
A42 -
B05 + MPY E1
A62 + MPY E2
4-AB
B BIT 1
B59 +
B BIT ∅
B04 +
B REG=∅
B44 -
T2
B43 -
B BIT 15
B19 -
B BIT 14
B25 -
B BIT 2
B60 +
B BIT 3
B61 +
B BIT 4
B62 +
B BIT 5
B63 +
B BIT 6
B64 +
B BIT 7
B65 +
B BIT 8
B66 +
B BIT 9
B67 +
B BIT

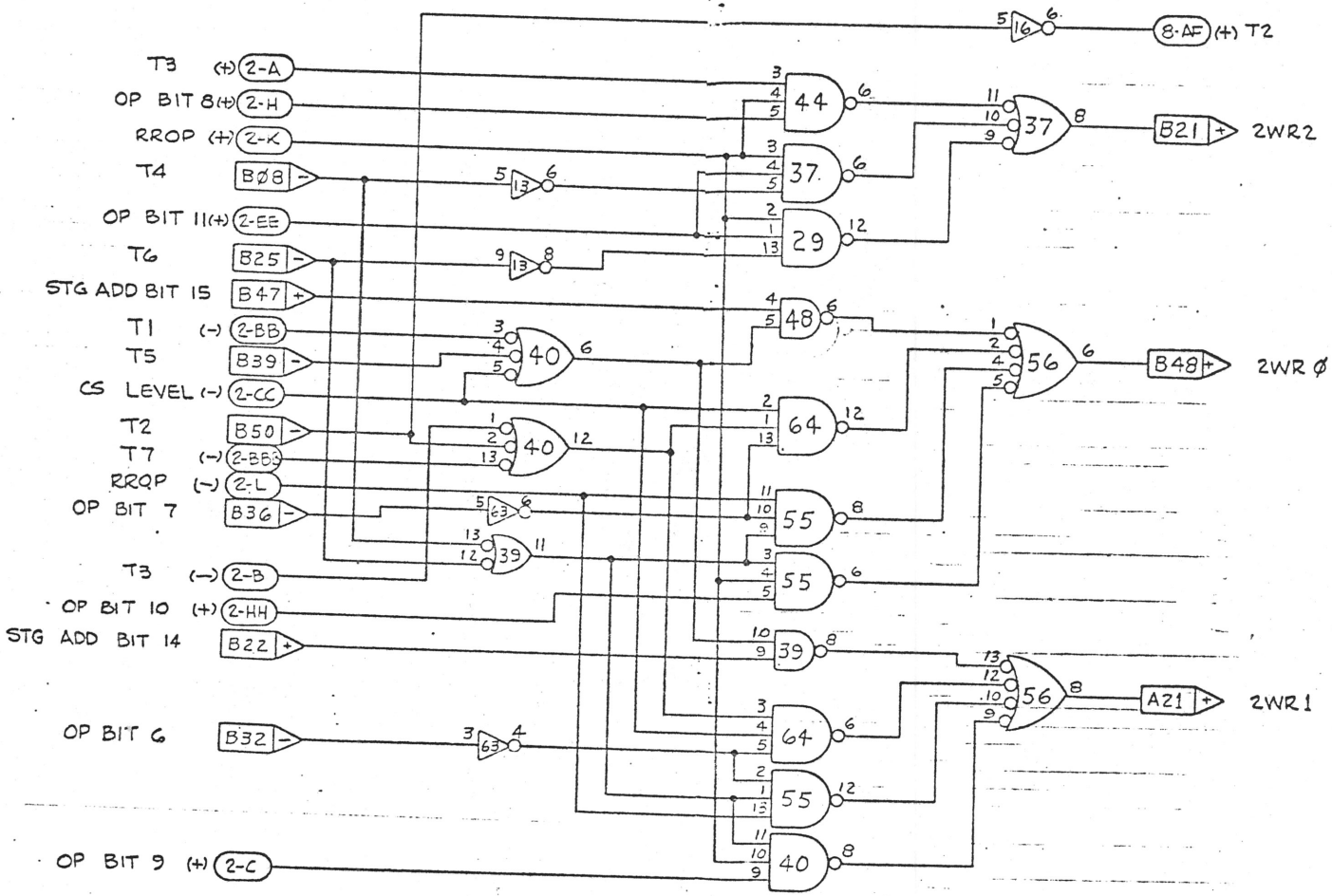

SC 2133

COMPUTER HARDWARE INC

DWG NO 2133

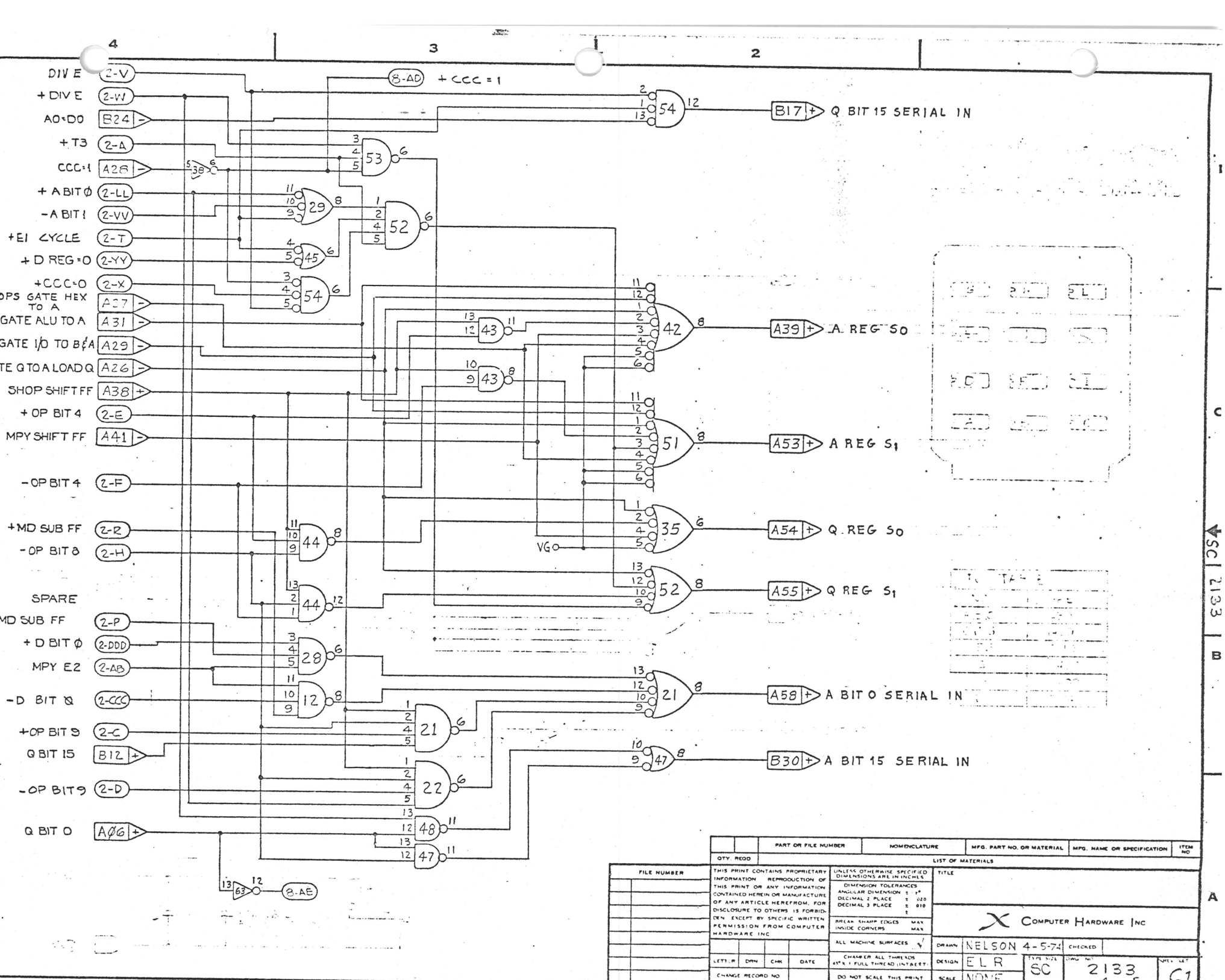
4
3
2
DIV E 2-V
+ DIV E 2-W
A0=D0 B24
+T3 2-A
CCC=1 A28
+ A BIT Ø 2-LL
- A BIT 1 2-VV
+E1 CYCLE 2-T
+ D REG=0 2-YY
+CCC=0 2-X
OPS GATE HEX TO A A27
GATE ALU TO A A31
GATE I/O TO B&A A29
TE Q TO A LOAD Q A26
SHOP SHIFT FF A38
+ OP BIT 4 2-E
MPY SHIFT FF A41
- OP BIT 4 2-F
+MD SUB FF 2-R
- OP BIT 8 2-H
SPARE
MD SUB FF 2-P
+ D BIT Ø 2-DDD
MPY E2 2-AB
- D BIT Ø 2-CCC
+OP BIT 9 2-C
Q BIT 15 B12
- OP BIT 9 2-D
Q BIT 0 AØ6
8-AD + CCC = 1
B17 Q BIT 15 SERIAL IN
A39 A REG S0
A53 A REG S1
A54 Q REG S0
A55 Q REG S1
A58 A BIT 0 SERIAL IN
B30 A BIT 15 SERIAL IN
VGO
8-AE
PART OR FILE NUMBER
NOMENCLATURE
MFG. PART NO. OR MATERIAL
MFG. NAME OR SPECIFICATION
ITEM NO
QTY. REQD
LIST OF MATERIALS
FILE NUMBER
THIS PRINT CONTAINS PROPRIETARY INFORMATION. REPRODUCTION OF THIS PRINT OR ANY INFORMATION CONTAINED HEREIN OR MANUFACTURE OF ANY ARTICLE HEREFROM, FOR DISCLOSURE TO OTHERS IS FORBIDDEN EXCEPT BY SPECIFIC WRITTEN PERMISSION FROM COMPUTER HARDWARE INC.
UNLESS OTHERWISE SPECIFIED DIMENSIONS ARE IN INCHES
DIMENSION TOLERANCES
ANGULAR DIMENSION ± 1°
DECIMAL 2 PLACE ± .020
DECIMAL 3 PLACE ± .010
BREAK SHARP EDGES MAX
INSIDE CORNERS MAX
ALL MACHINE SURFACES √
CHAMFER ALL THREADS 45° x 1 FULL THREAD (INTACT)
DO NOT SCALE THIS PRINT
TITLE
COMPUTER HARDWARE INC
DRAWN NELSON 4-5-74
CHECKED
DESIGN E L R
SCALE NONE
TYPE SIZE SC
DWG NO 2133
SHEET NO C1
LETTER DRN CHK DATE
CHANGE RECORD NO
SC 2133
A
B
C
D

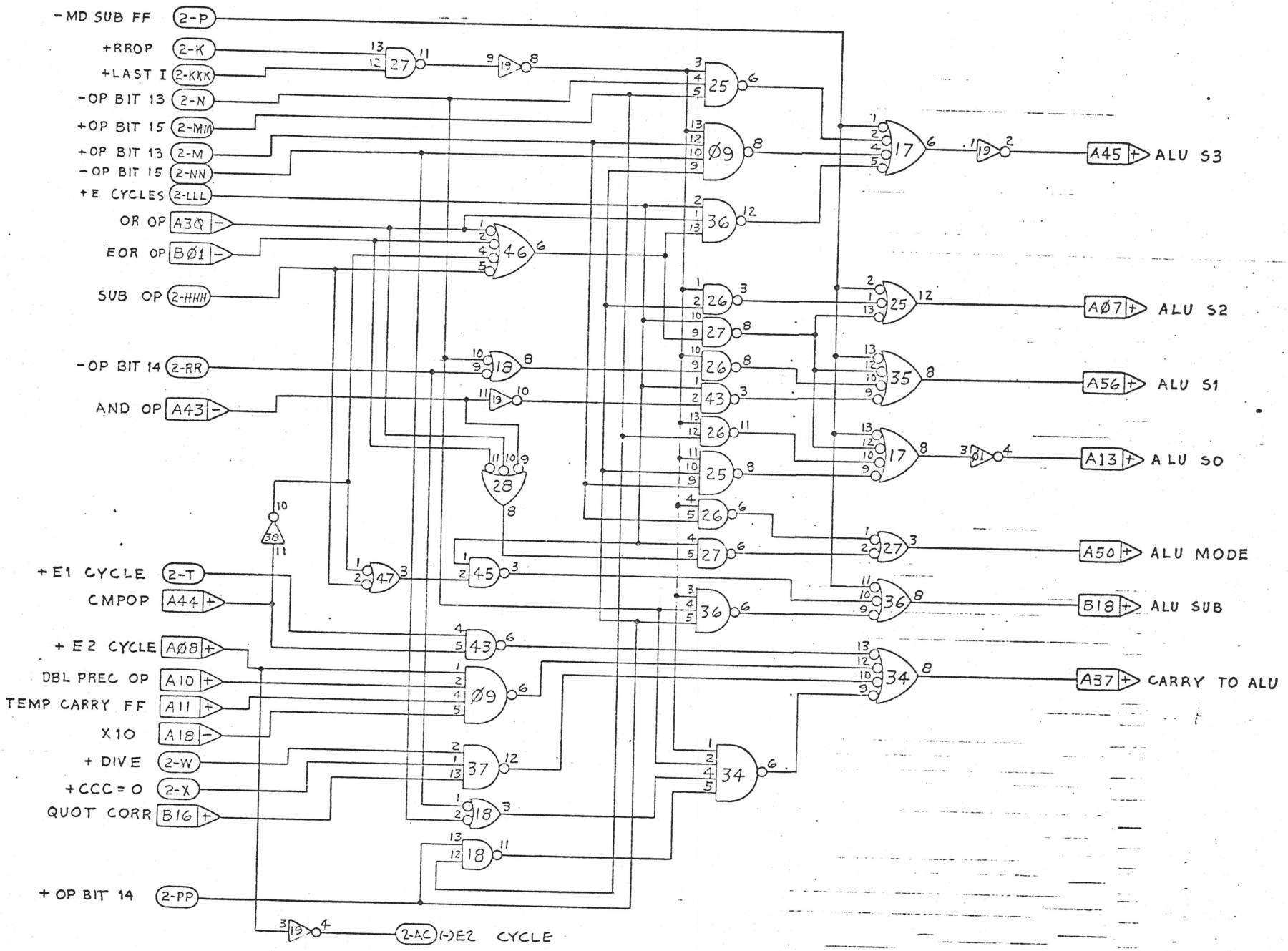

COMPUTER HARDWARE INC			
TYPE SIZE	DWG NO	REV LET	
SC	2133	C	

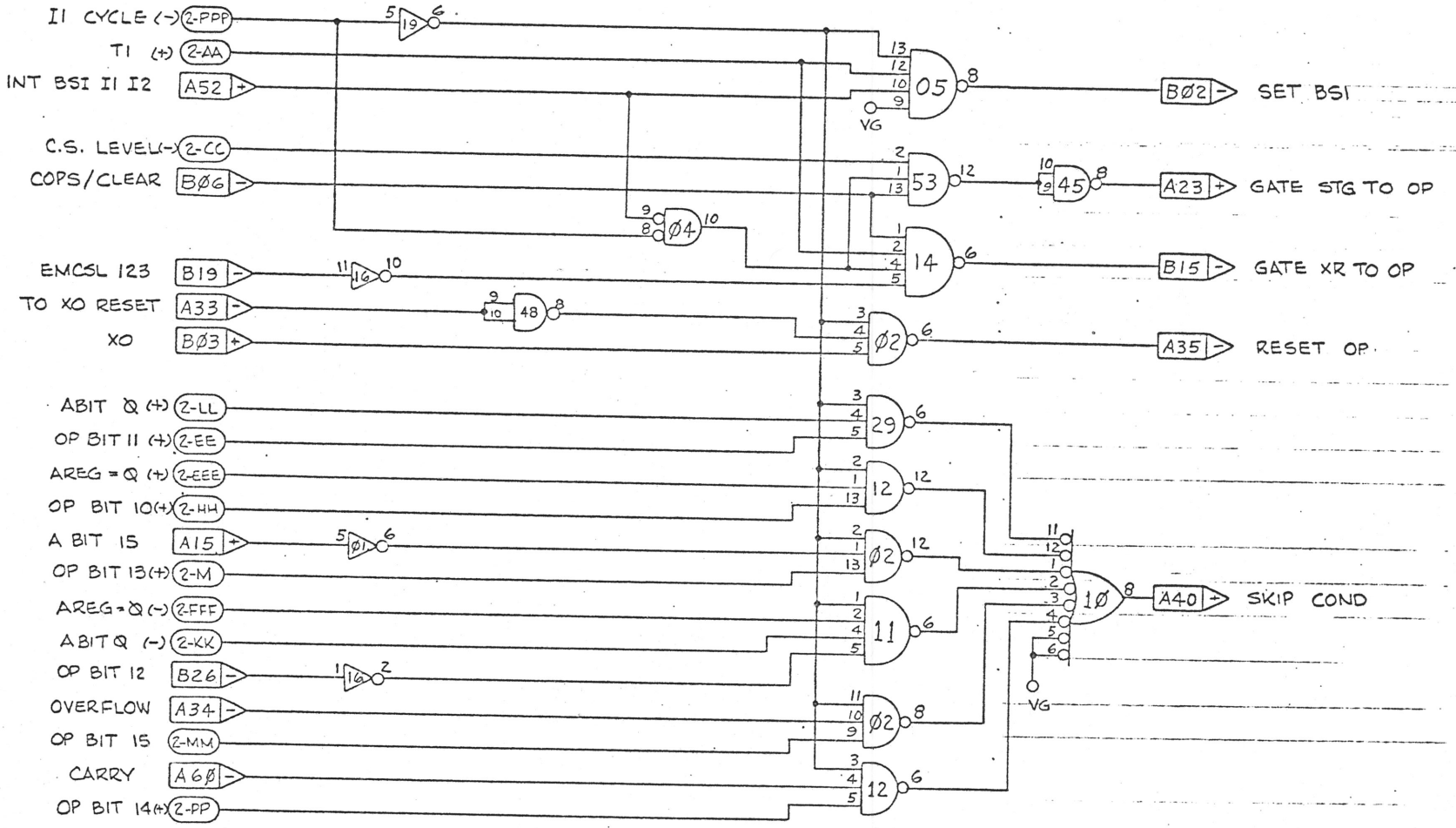

COMPUTER HARDWARE INC		
TYPE-SIZE SC	DWG NO 2133	REV LET C1

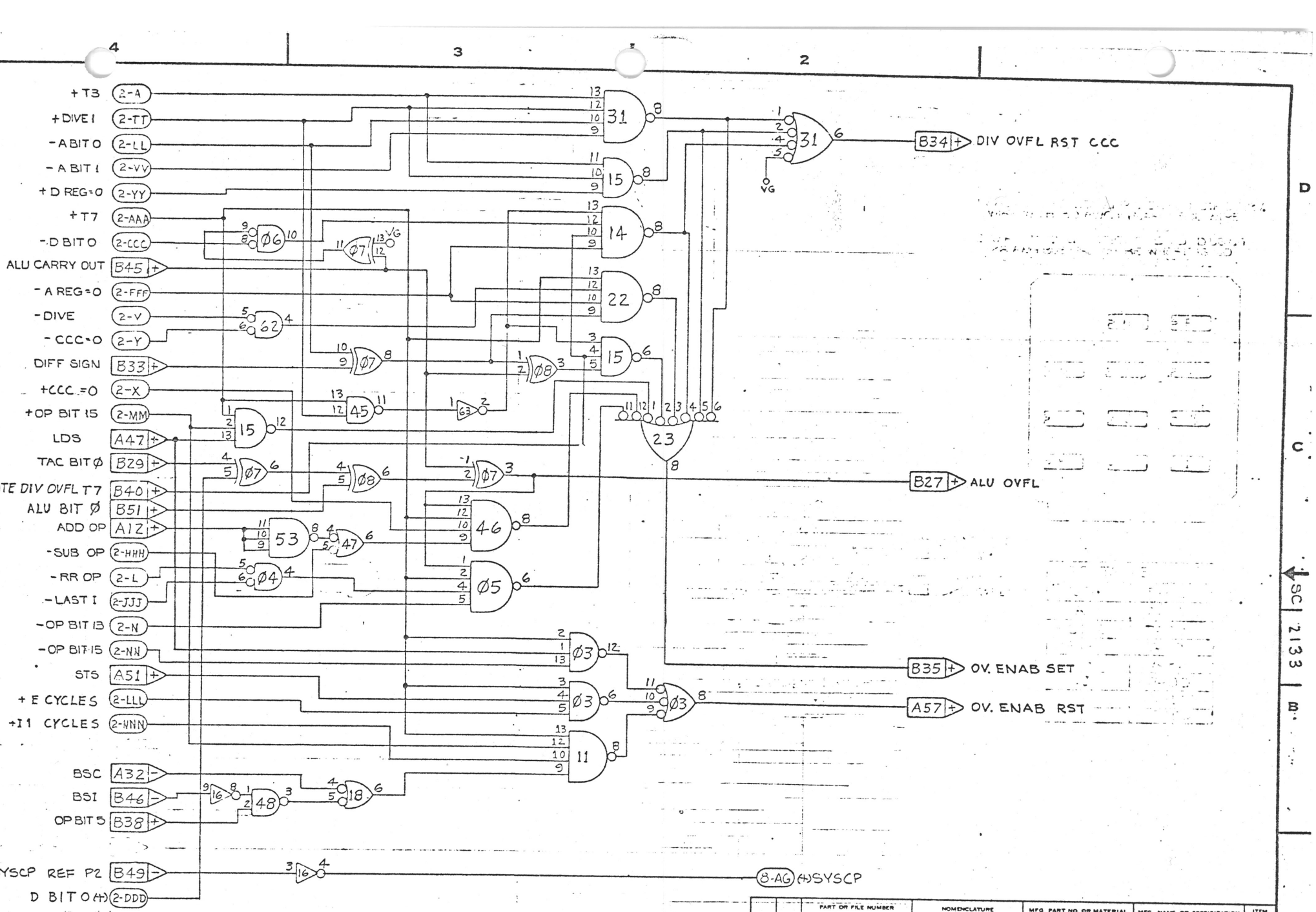

QTY. REQD	PART OR FILE NUMBER	NOMENCLATURE	MFG. PART NO. OR MATERIAL	MFG. NAME OR SPECIFICATION	ITEM NO
		LIST OF MATERIALS			

FILE NUMBER

THIS PRINT CONTAINS PROPRIETARY INFORMATION. REPRODUCTION OF THIS PRINT OR ANY INFORMATION CONTAINED HEREIN OR MANUFACTURE OF ANY ARTICLE HEREFROM, FOR DISCLOSURE TO OTHERS, IS FORBIDDEN EXCEPT BY SPECIFIC WRITTEN PERMISSION FROM COMPUTER HARDWARE INC

LETTER	DRN	CHK	DATE
CHANGE RECORD NO			

UNLESS OTHERWISE SPECIFIED DIMENSIONS ARE IN INCHES
DIMENSION TOLERANCES
ANGULAR DIMENSION ± 1°
DECIMAL 2 PLACE ± .020
DECIMAL 3 PLACE ± .010
BREAK SHARP EDGES MAX
INSIDE CORNERS MAX
ALL MACHINE SURFACES
CHAMFER ALL THREADS .45° x 1 FULL THREAD (INTERNAL)
DO NOT SCALE THIS PRINT

TITLE

X COMPUTER HARDWARE INC.

DRAWN	G. HEALY	CHECKED		
DESIGN	E.L.R.	SIZE	DWG NO	REV LET
SCALE	NONE	SC	2133	C

SC 2133

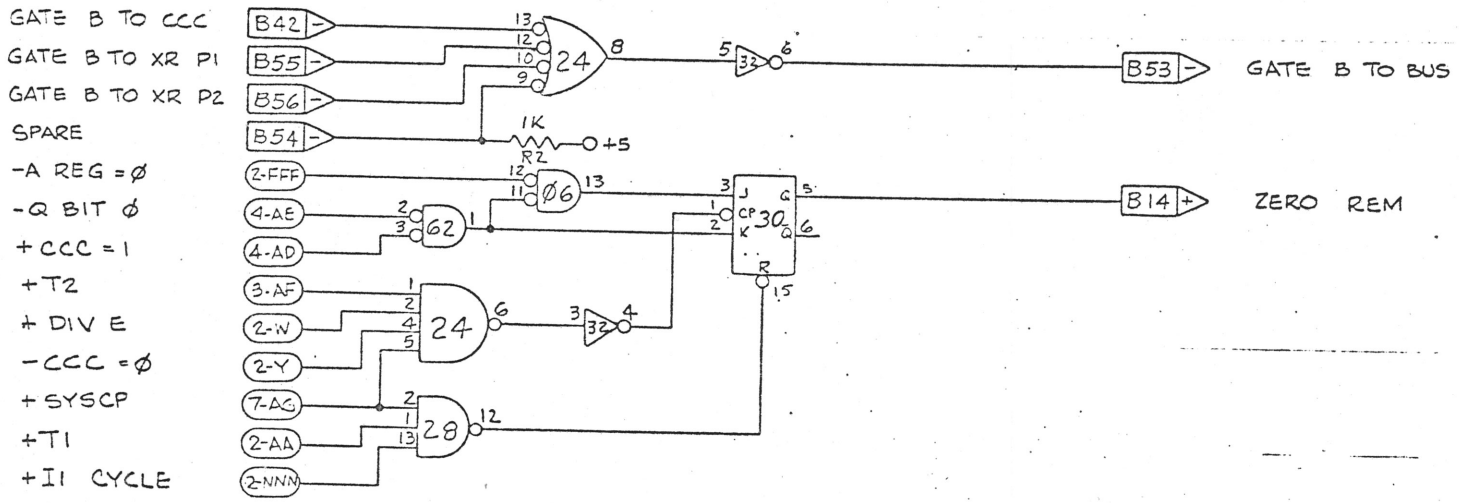

COMPUTER HARDWARE INC

TYPE-SIZE | DWG NO 2133 | REV LET

SC 2133

NOTES:
1- DELETED.

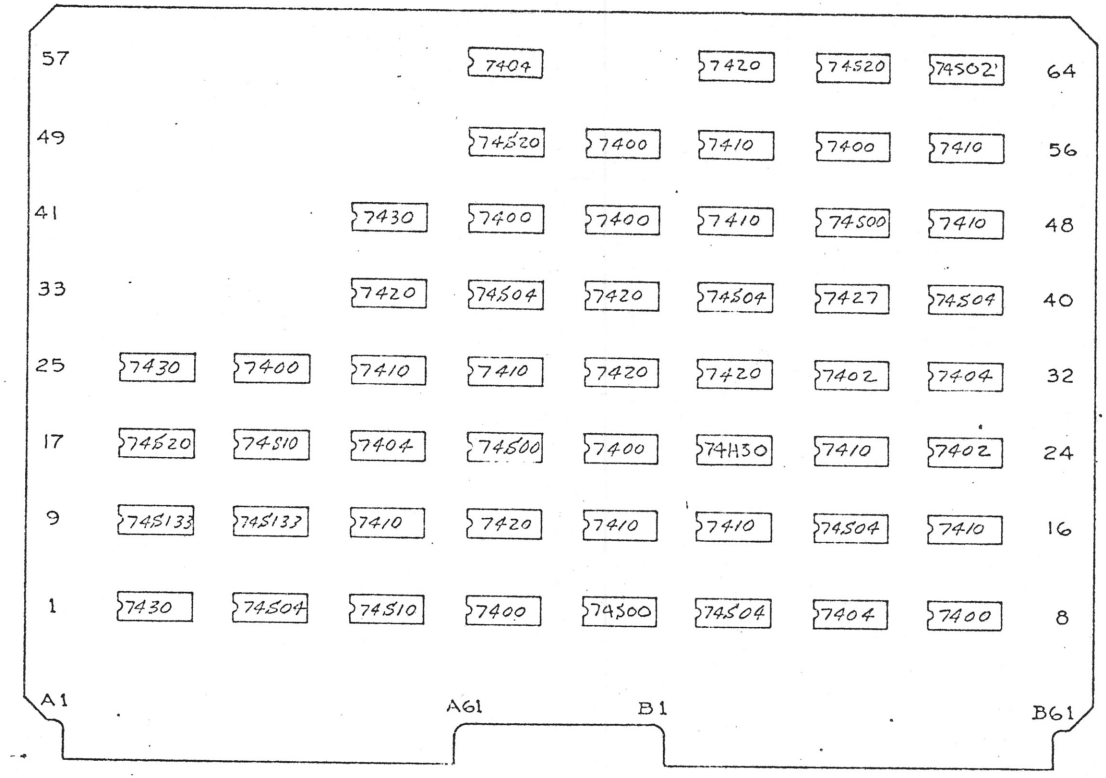

ASSEMBLY REVISION DATA (REF)

REV. LTR.	DESCRIPTION	REASON
C	CONTACT B34 TO PIN 9&10 IC 7400 POS 8 TO PIN 4 IC 74S00 POS. 5. ADDED CONFIGURATION TABLE	DESIGN CHANGE ESTAB. CONFIG. CONTROL
D	ADDED IC 7404 POSITION 60	TO SLOW DOWN LOAD XRQ-7 GATE IN ORDER TO PREVENT GATING INDEX REGISTERS TOO SOON
E	CIRCUIT ADDED. IC 60 PIN 1 TO IC 01 PIN 8 & IC 60 PIN 2 TO CONTACT A17. CIRCUIT CUT BETWEEN IC 01 & CONT. A17	ELIMINATE NOISE ON LOAD D GATE
F	CIRCUIT ADDED. IC 38 PIN 1 TO IC 01 PIN 8 & IC 38 PIN 2 TO CONTACT A19. CIRCUIT CUT BETWEEN IC 60 PIN 1 AND IC 01 PIN 8 & BETWEEN IC 60 PIN 2 AND CONTACT A19	SPEED UP LOAD D GATE

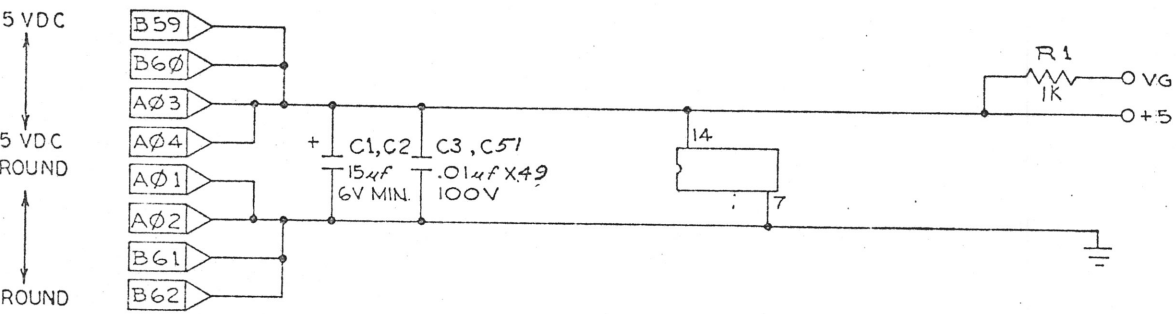

CONFIGURATION TABLE

SCHEMATIC	REV	PC	REV	ASSY	REV
SC-2145	NC	PC-2146	NC	AC-2147	NC
SC-2145	NC		NC		A
	A		NC		B
	B		NC		C
SC-2145	C	PC-2146	NC	AC-2147	D
SC-2145	D	PC-2146	NC	AC-2147	E
SC-2145	E	PC-2146	NC	AC-2147	F
SC-2145	F	PC-2146	A	AC-2147	G
SC-2145	G	PC-2146	A	AC-2147	H

LAST USED TABLE

CODE	REF DES	FILE NUMBER
MXY	C51	
	R8	

QTY REQD	PART OR FILE NUMBER	NOMENCLATURE	MFG PART NO OR MATERIAL	MFG NAME OR SPECIFICATION	ITEM NO

LIST OF MATERIALS

THIS PRINT CONTAINS PROPRIETARY INFORMATION. REPRODUCTION OF THIS PRINT OR ANY INFORMATION CONTAINED HEREIN OR MANUFACTURE OF ANY ARTICLE HEREFROM FOR DISCLOSURE TO OTHERS IS FORBIDDEN EXCEPT BY SPECIFIC WRITTEN PERMISSION FROM COMPUTER HARDWARE INC.

UNLESS OTHERWISE SPECIFIED DIMENSIONS ARE IN INCHES
DIMENSION TOLERANCES
ANGULAR DIMENSION ± 2°
DECIMAL 2 PLACE ± .020
DECIMAL 3 PLACE ± .010
BREAK SHARP EDGES MAX
INSIDE CORNERS MAX
ALL MACHINE SURFACES
CHAMFER ALL THREADS
ALL FULL THREAD INTAKES

LETTER	DRN	CHK	DATE
G	KWF	HS	[illegible]

TITLE
CONTROL, DATA BUS-2131

COMPUTER HARDWARE INC
TCW 11-8-74

DRAWN DF 7-26-74 CHECKED [illegible]
DESIGN T. WALTERS
SIZE 2145
SCI 2145
2096

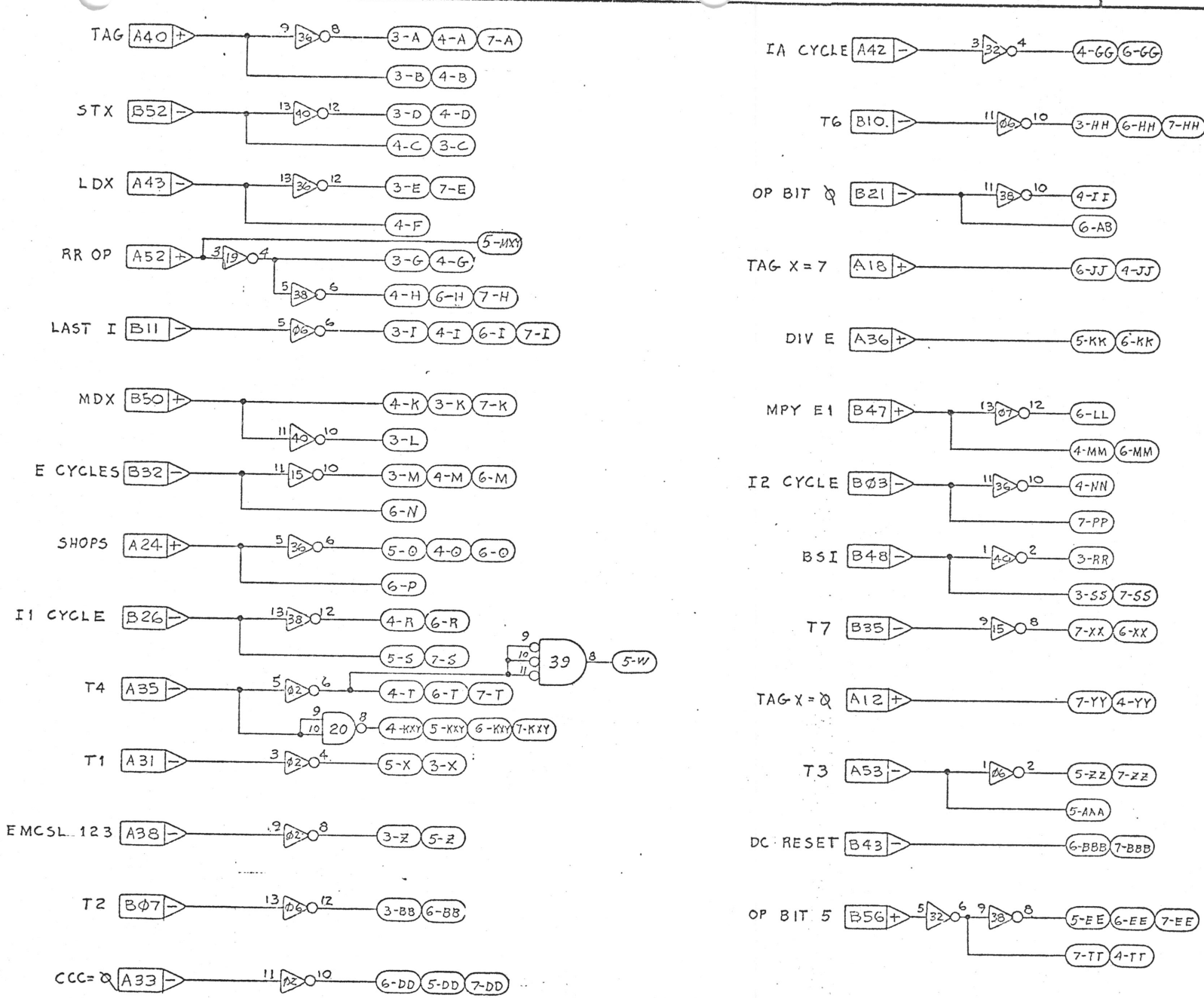
TAG A40 + 9 39 8 3-A 4-A 7-A 3-B 4-B
STX B52 - 13 40 12 3-D 4-D 4-C 3-C
LDX A43 - 13 36 12 3-E 7-E 4-F
RR OP A52 + 3 19 4 5-MXY 3-G 4-G 5 38 6 4-H 6-H 7-H
LAST I B11 - 5 Ø6 6 3-I 4-I 6-I 7-I
MDX B50 + 4-K 3-K 7-K 11 40 10 3-L
E CYCLES B32 - 11 15 10 3-M 4-M 6-M 6-N
SHOPS A24 + 5 36 6 5-O 4-O 6-O 6-P
I1 CYCLE B26 - 13 38 12 4-R 6-R 5-S 7-S
9 10 11 39 8 5-W
T4 A35 - 5 Ø2 6 4-T 6-T 7-T
9 10 20 8 4-KXY 5-KXY 6-KXY 7-KXY
T1 A31 - 3 Ø2 4 5-X 3-X
EMCSL 123 A38 - 9 Ø2 8 3-Z 5-Z
T2 BØ7 - 13 Ø6 12 3-BB 6-BB
CCC=Ø A33 - 11 Ø2 10 6-DD 5-DD 7-DD
IA CYCLE A42 - 3 32 4 4-GG 6-GG
T6 B10 - 11 Ø6 10 3-HH 6-HH 7-HH
OP BIT Ø B21 - 11 38 10 4-II 6-AB
TAG X=7 A18 + 6-JJ 4-JJ
DIV E A36 + 5-KK 6-KK
MPY E1 B47 + 13 Ø7 12 6-LL 4-MM 6-MM
I2 CYCLE BØ3 - 11 36 10 4-NN 7-PP
BSI B48 - 1 40 2 3-RR 3-SS 7-SS
T7 B35 - 9 15 8 7-XX 6-XX
TAG X=Ø A12 + 7-YY 4-YY
T3 A53 - 1 Ø6 2 5-ZZ 7-ZZ 5-AAA
DC RESET B43 - 6-BBB 7-BBB
OP BIT 5 B56 + 5 32 6 9 38 8 5-EE 6-EE 7-EE 7-TT 4-TT

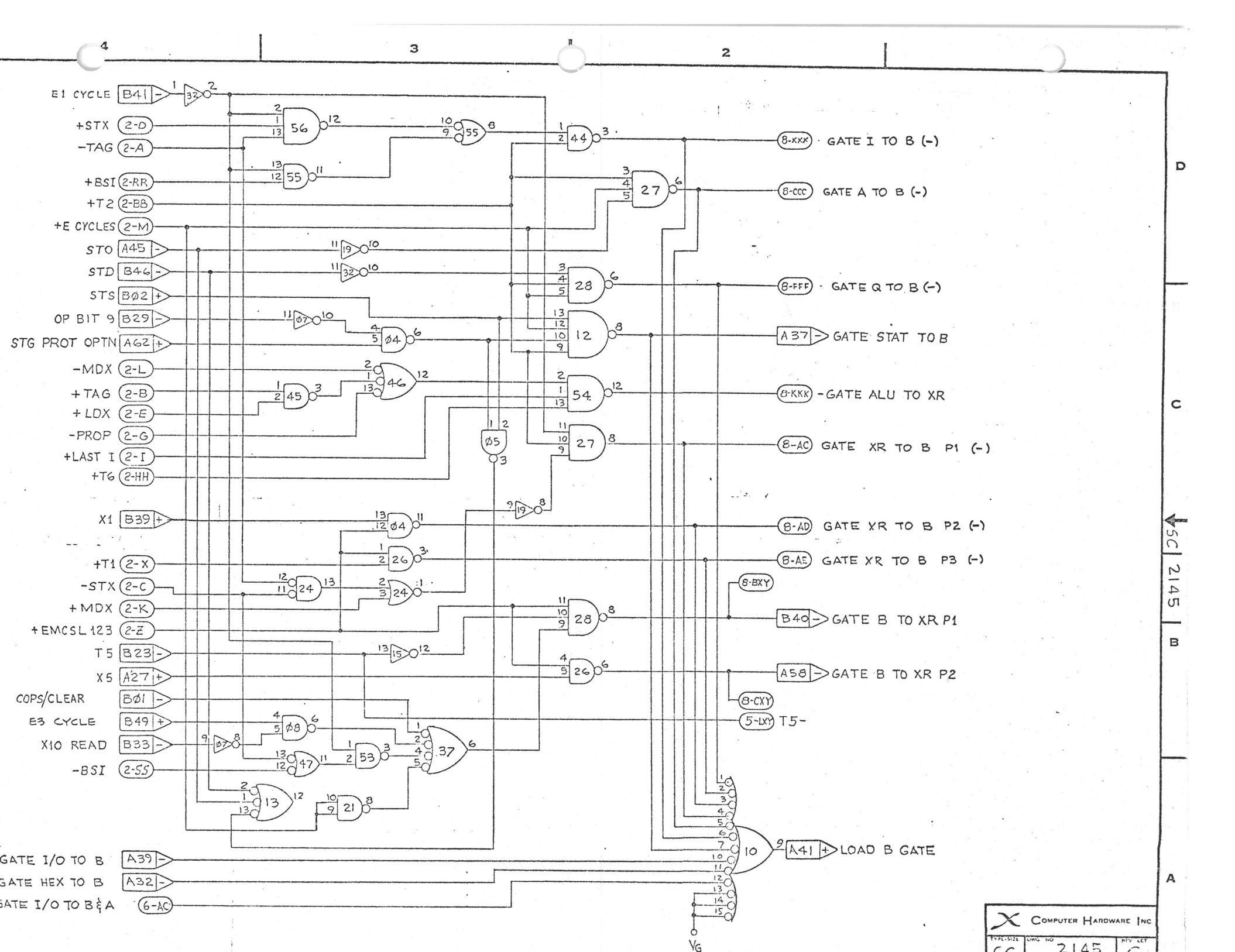
E1 CYCLE B41 -
+STX 2-D
-TAG 2-A
+BSI 2-RR
+T2 2-BB
+E CYCLES 2-M
STO A45 -
STD B46 -
STS BØ2 +
OP BIT 9 B29 -
STG PROT OPTN A62 +
-MDX 2-L
+TAG 2-B
+LDX 2-E
-PROP 2-G
+LAST I 2-I
+T6 2-HH
X1 B39 +
+T1 2-X
-STX 2-C
+MDX 2-K
+EMCSL 123 2-Z
T5 B23 -
X5 A27 +
COPS/CLEAR BØ1 -
E3 CYCLE B49 +
X10 READ B33 -
-BSI 2-SS
GATE I/O TO B A39 -
GATE HEX TO B A32 -
GATE I/O TO B & A 6-AC
8-XXX GATE I TO B (-)
8-CCC GATE A TO B (-)
8-FFF GATE Q TO B (-)
A37 - GATE STAT TO B
8-KKK - GATE ALU TO XR
8-AC GATE XR TO B P1 (-)
8-AD GATE XR TO B P2 (-)
8-AE GATE XR TO B P3 (-)
8-BXY
B40 - GATE B TO XR P1
A58 - GATE B TO XR P2
8-CXY
5-LXY T5-
A41 + LOAD B GATE
VG
COMPUTER HARDWARE INC
SC 2145

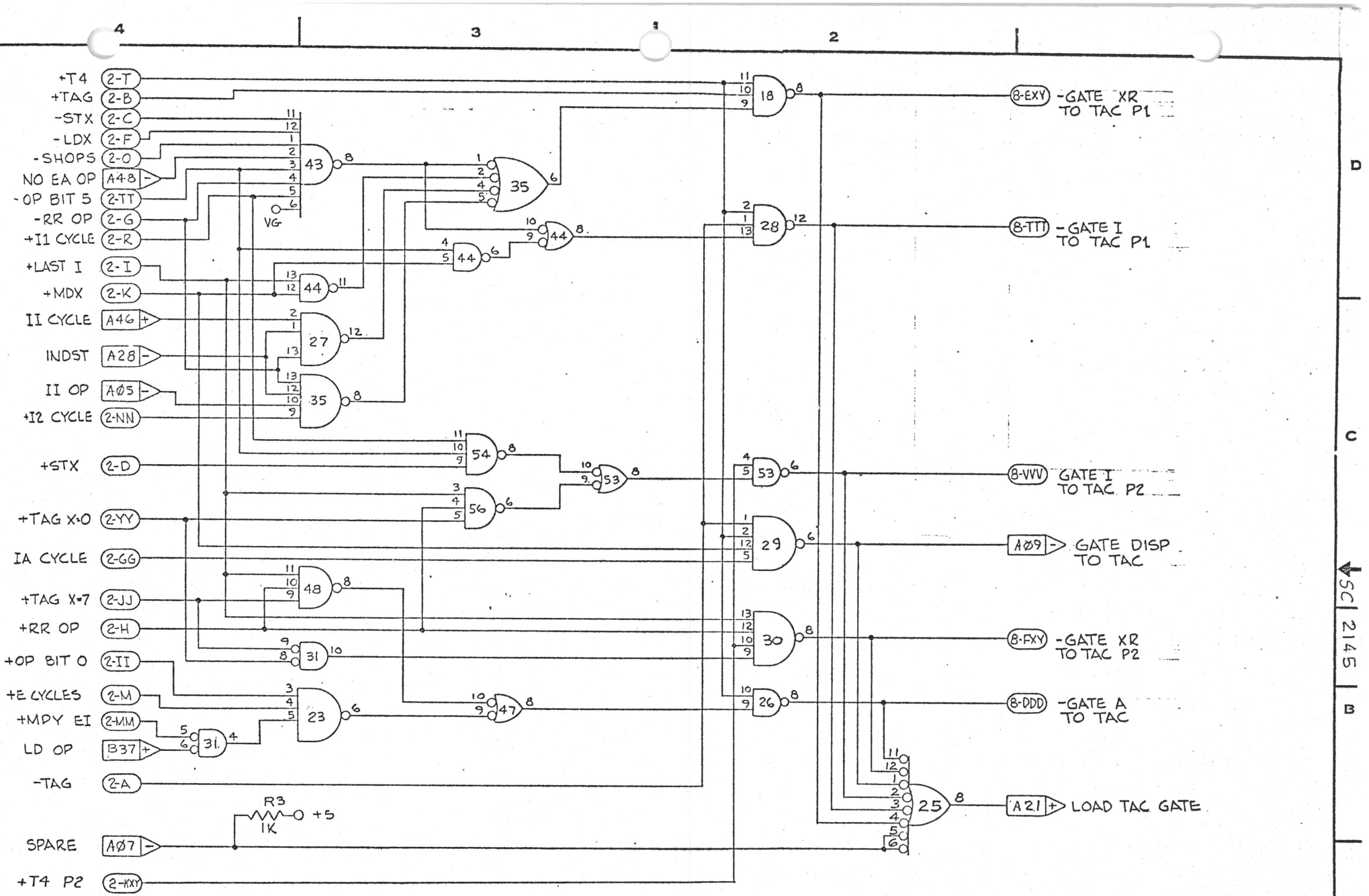
+T4 2-T
+TAG 2-B
-STX 2-C
-LDX 2-F
-SHOPS 2-O
NO EA OP A48
-OP BIT 5 2-TT
-RR OP 2-G
+I1 CYCLE 2-R
+LAST I 2-I
+MDX 2-K
II CYCLE A46
INDST A28
II OP AØ5
+I2 CYCLE 2-NN
+STX 2-D
+TAG X-0 2-YY
IA CYCLE 2-GG
+TAG X-7 2-JJ
+RR OP 2-H
+OP BIT 0 2-II
+E CYCLES 2-M
+MPY EI 2-MM
LD OP B37
-TAG 2-A
SPARE AØ7
+T4 P2 2-KKY
R3
1K
+5
VG
43
35
44
44
44
27
35
54
53
56
48
31
23
31
47
18
28
53
29
30
26
25
8-EXY -GATE XR TO TAC P1
8-TTT -GATE I TO TAC P1
8-VVV GATE I TO TAC P2
AØ9 GATE DISP TO TAC
8-FXY -GATE XR TO TAC P2
8-DDD -GATE A TO TAC
A21 LOAD TAC GATE

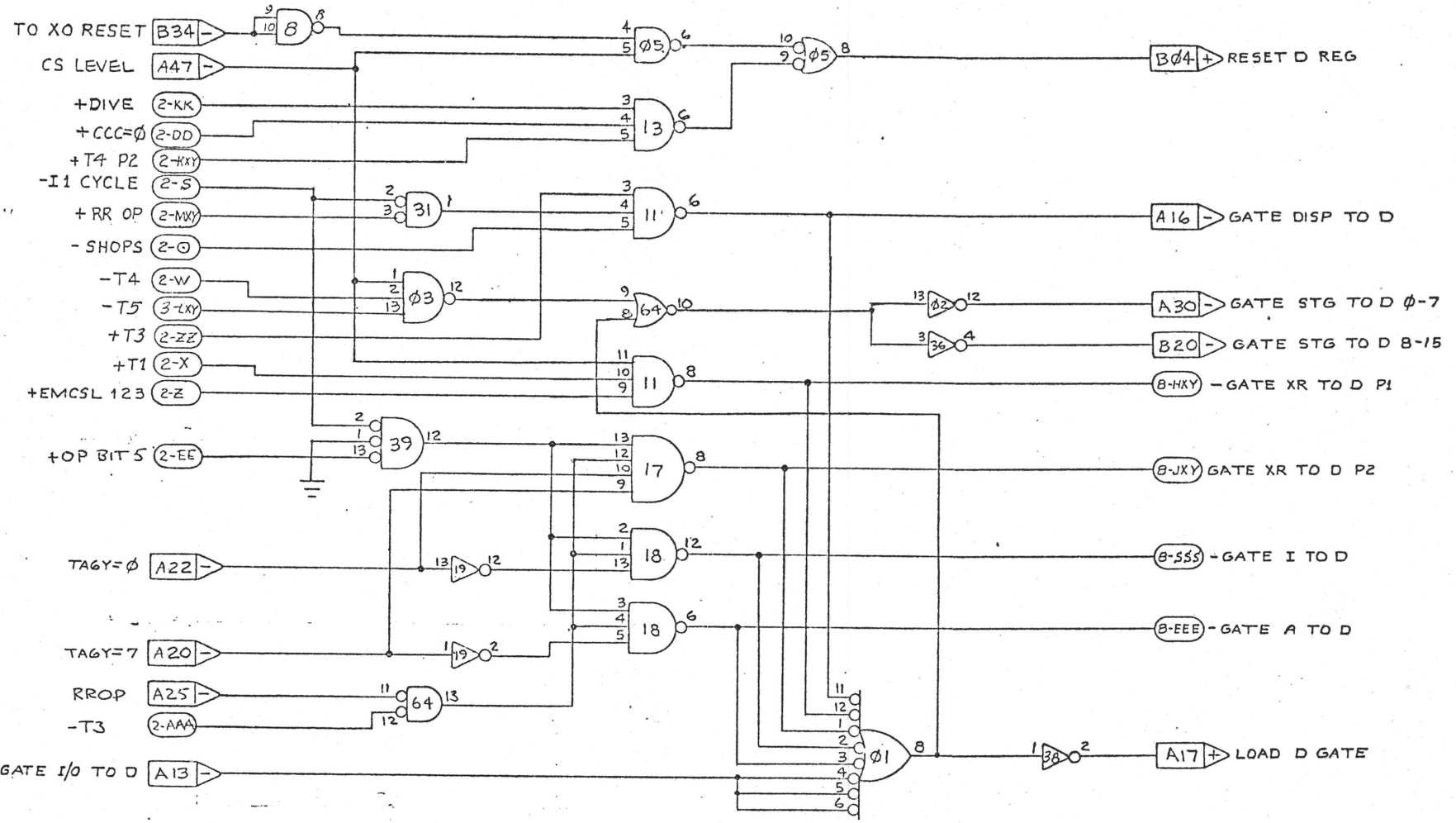

X COMPUTER HARDWARE INC			
TYPE-SIZE SC	DWG NO 2145	REV LET G	

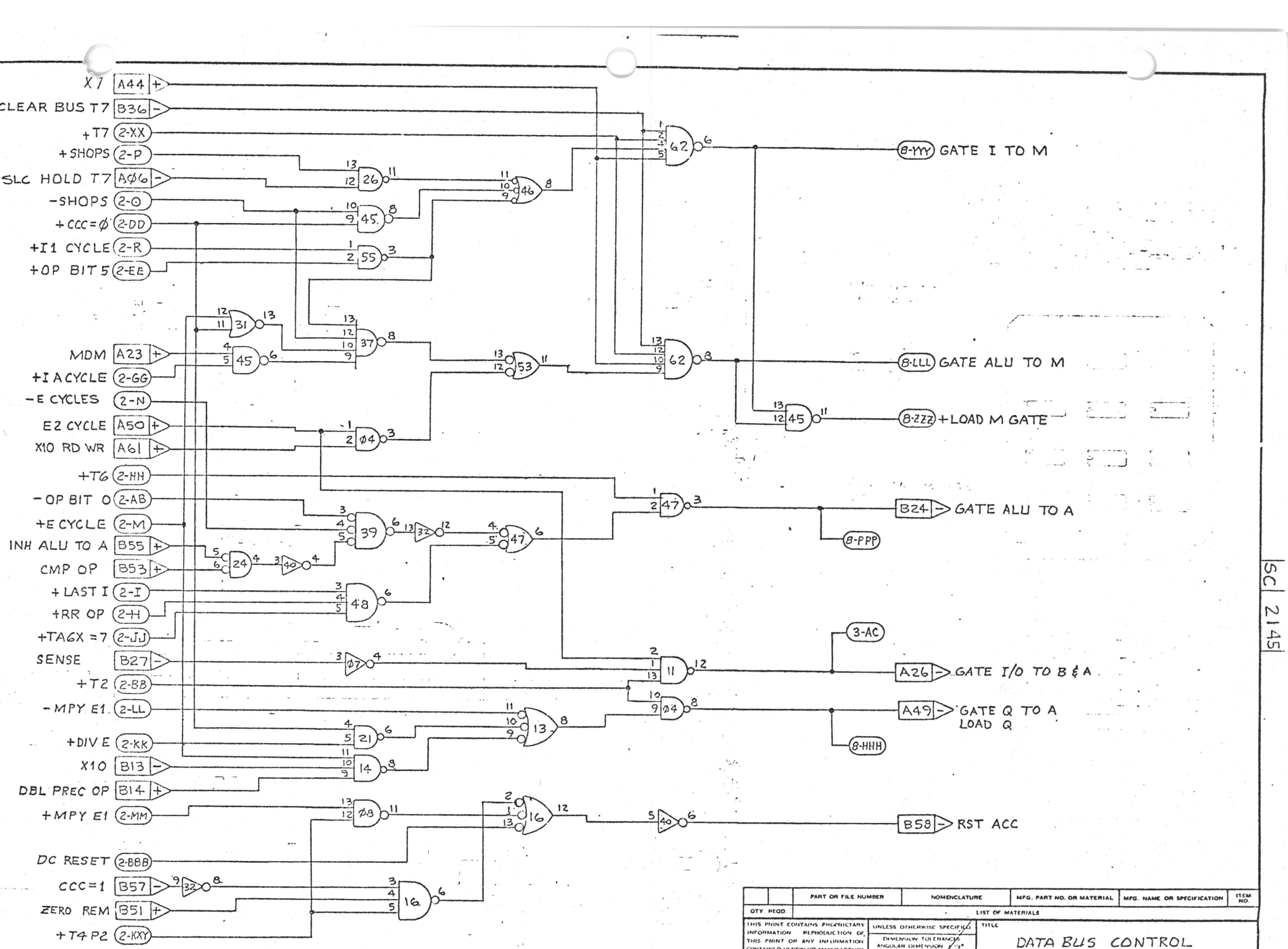

		PART OR FILE NUMBER	NOMENCLATURE	MFG. PART NO. OR MATERIAL	MFG. NAME OR SPECIFICATION	ITEM NO.
QTY. REQD.			LIST OF MATERIALS			

THIS PRINT CONTAINS PROPRIETARY INFORMATION. REPRODUCTION OF THIS PRINT OR ANY INFORMATION CONTAINED HEREIN OR MANUFACTURE OF ANY ARTICLE HEREFROM FOR DISCLOSURE TO OTHERS IS FORBIDDEN, EXCEPT BY SPECIFIC WRITTEN PERMISSION FROM COMPUTER HARDWARE INC.

UNLESS OTHERWISE SPECIFIED
DIMENSION TOLERANCES
ANGULAR DIMENSION ± 1/2°
DECIMAL 2 PLACE ± .010
DECIMAL 3 PLACE ± .005
FRACTIONAL ±
BREAK SHARP EDGES MAX.
INSIDE CORNERS MAX.
ALL MACHINE SURFACES √
CHAMFER ALL THREADS 45° X 1 FULL THREAD (INT&EXT)

TITLE
DATA BUS CONTROL

X COMPUTER HARDWARE INC.

LETTER	DRN	CHK	DATE

DRAWN — CHECKED —
DESIGN ELR TYPE SIZE SC DWG. NO. 2145 REV. LET.

SC 2145

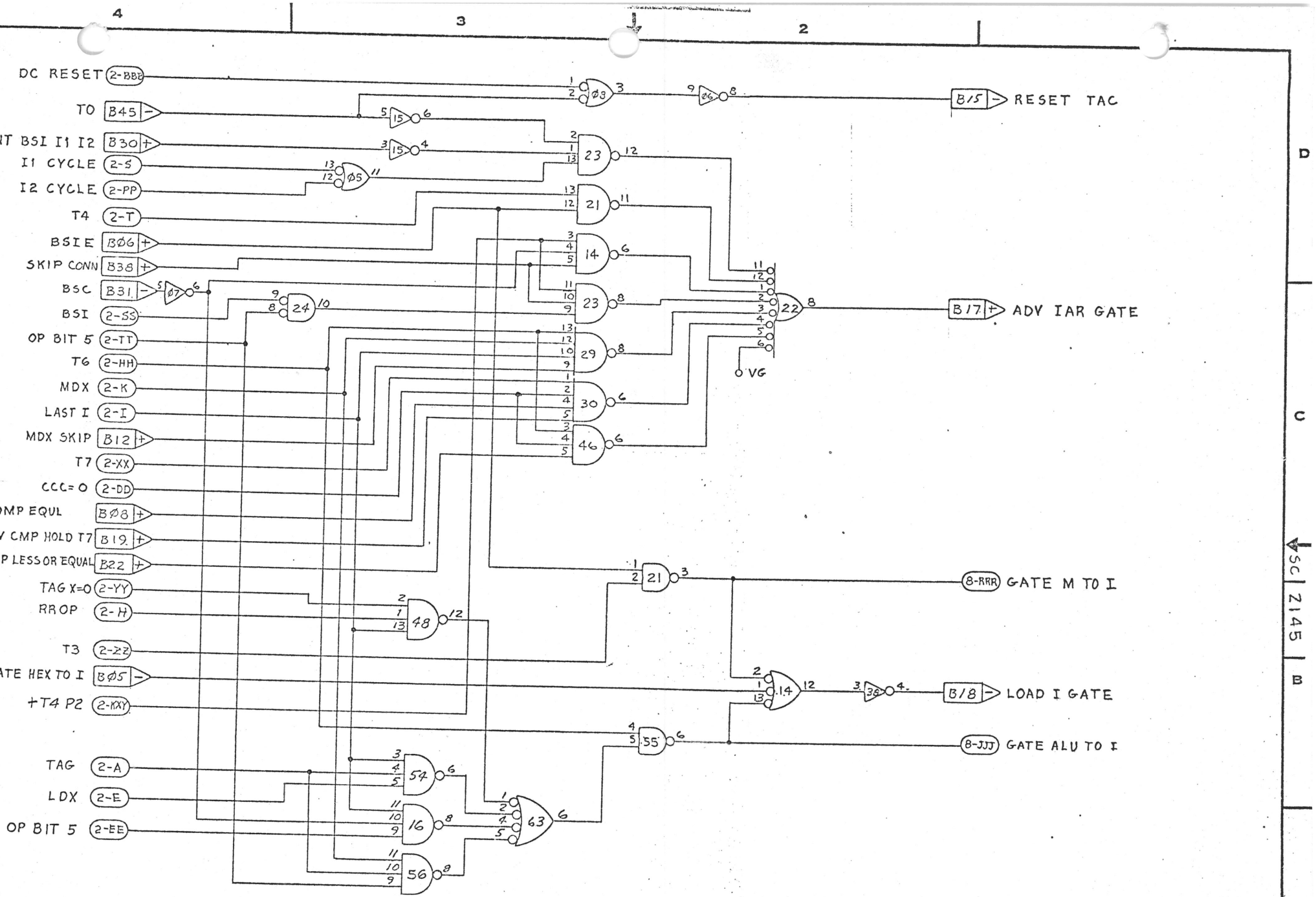

COMPUTER HARDWARE INC			
TYPE-SIZE	DWG NO		REV LET
SC	2145		G

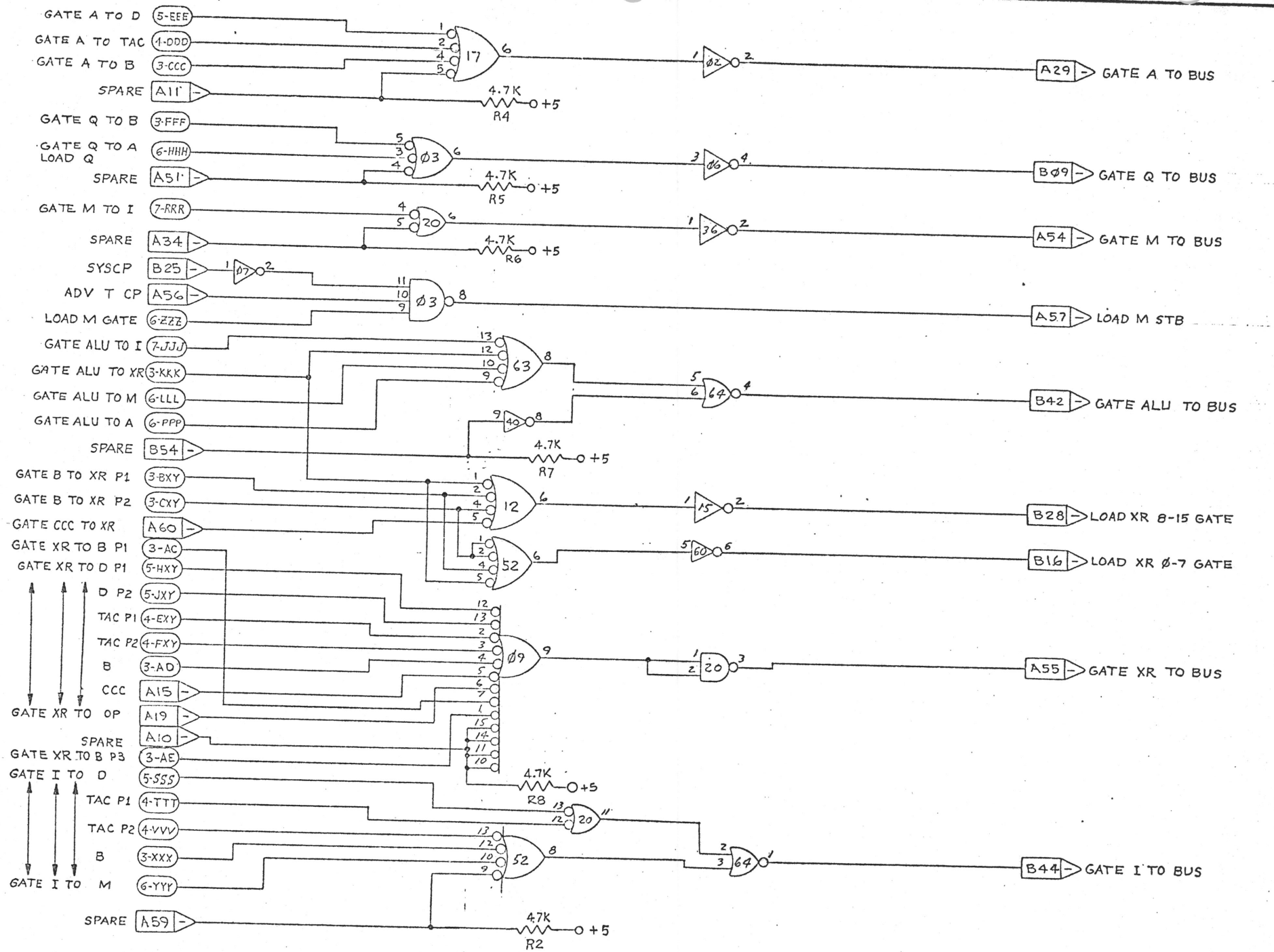
GATE A TO D
GATE A TO TAC
GATE A TO B
SPARE
GATE Q TO B
GATE Q TO A LOAD Q
SPARE
GATE M TO I
SPARE
SYSCP
ADV T CP
LOAD M GATE
GATE ALU TO I
GATE ALU TO XR
GATE ALU TO M
GATE ALU TO A
SPARE
GATE B TO XR P1
GATE B TO XR P2
GATE CCC TO XR
GATE XR TO B P1
GATE XR TO D P1
D P2
TAC P1
TAC P2
B
CCC
GATE XR TO OP
SPARE
GATE XR TO B P3
GATE I TO D
TAC P1
TAC P2
B
GATE I TO M
SPARE
5-EEE
1-DDD
3-CCC
A11
4.7K
R4
+5
3-FFF
6-HHH
A51
R5
7-RRR
A34
R6
B25
A56
6-ZZZ
A57
LOAD M STB
7-JJJ
3-KKK
6-LLL
6-PPP
B54
R7
3-BXY
3-CXY
A60
3-AC
5-HXY
5-JXY
4-EXY
4-FXY
3-AD
A15
A19
A10
3-AE
5-SSS
4-TTT
4-VVV
3-XXX
6-YYY
A59
R2
A29
GATE A TO BUS
BØ9
GATE Q TO BUS
A54
GATE M TO BUS
B42
GATE ALU TO BUS
B28
LOAD XR 8-15 GATE
B16
LOAD XR Ø-7 GATE
A55
GATE XR TO BUS
B44
GATE I TO BUS
4
3
2
D
C
B
A
SC 2145

NOTES:
1-(REMOVED)

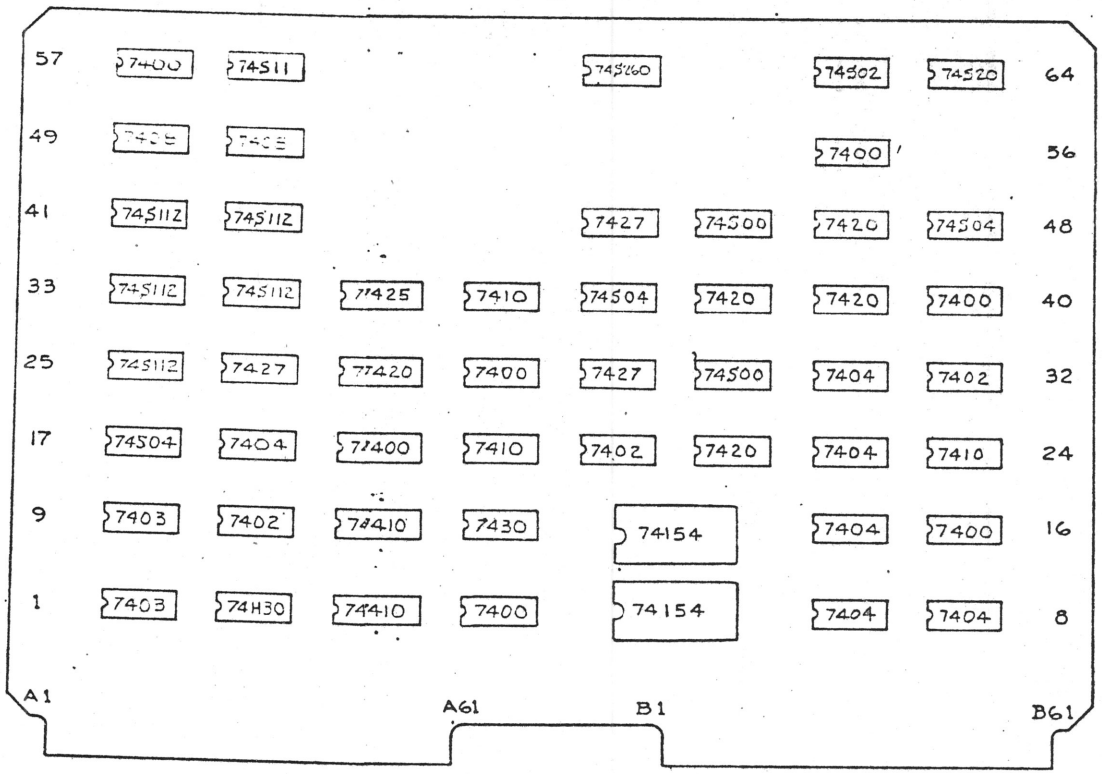

ASSEMBLY REVISION DATA (REF)		
REV. LTR.	DESCRIPTION	REASON
A	ADDED IC POS 58, 63 & 64	ENHANCE DECODING REG TO REG OPS
D	TO ELEMINATE BUS BAR AND REMOVE 11 .01uf CAP	REFLECT USE OF MULTILAYER PC CARD
E	ADD REWORK SHEET TO DWG	
F	ADD 74S260 I.C. IN POSITION 61	

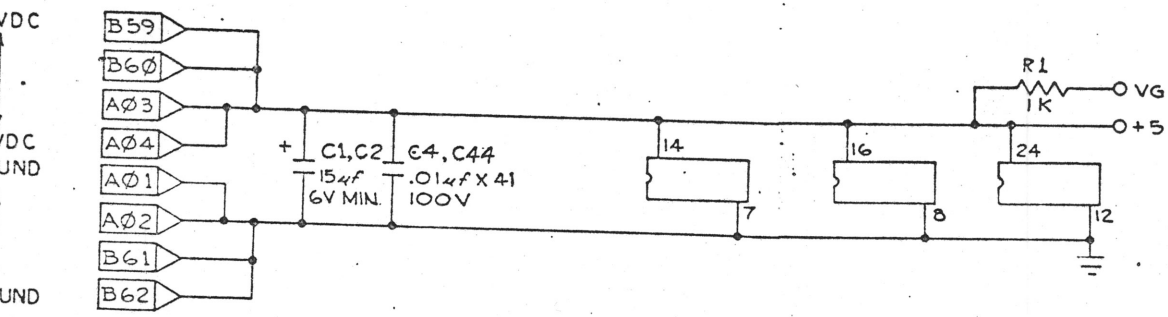

CONFIGURATION TABLE					
SCHEMATIC	REV	PC	REV	ASSY	REV
[illegible]		PC-2143	NC	AC-2144	NC
SC-2142	NC	PC-2143	NC	AC-2144	A
SC-2142	NC	PC-2143	NC	AC-2144	B
SC-2142	[illegible]	PC-2143	NC	AC-2144	C
SC-2142	B	PC-2143	A	AC-2144	D
SC-2142	C	PC-2143	A	AC-[illegible]	E
SC-2142	E	PC-2143	A	AC-2144	F

LAST USUSED TABLE	
CODE E	REF DES
BE	NC
	C59

QTY REQD	PART OR FILE NUMBER	NOMENCLATURE	MFG. PART NO OR MATERIAL	MFG. NAME OR SPECIFICATION	ITEM NO

LIST OF MATERIALS

CONTROL, MACHINE & CP DECODE — 2131

COMPUTER HARDWARE INC

SC 2142 D

SC 2142

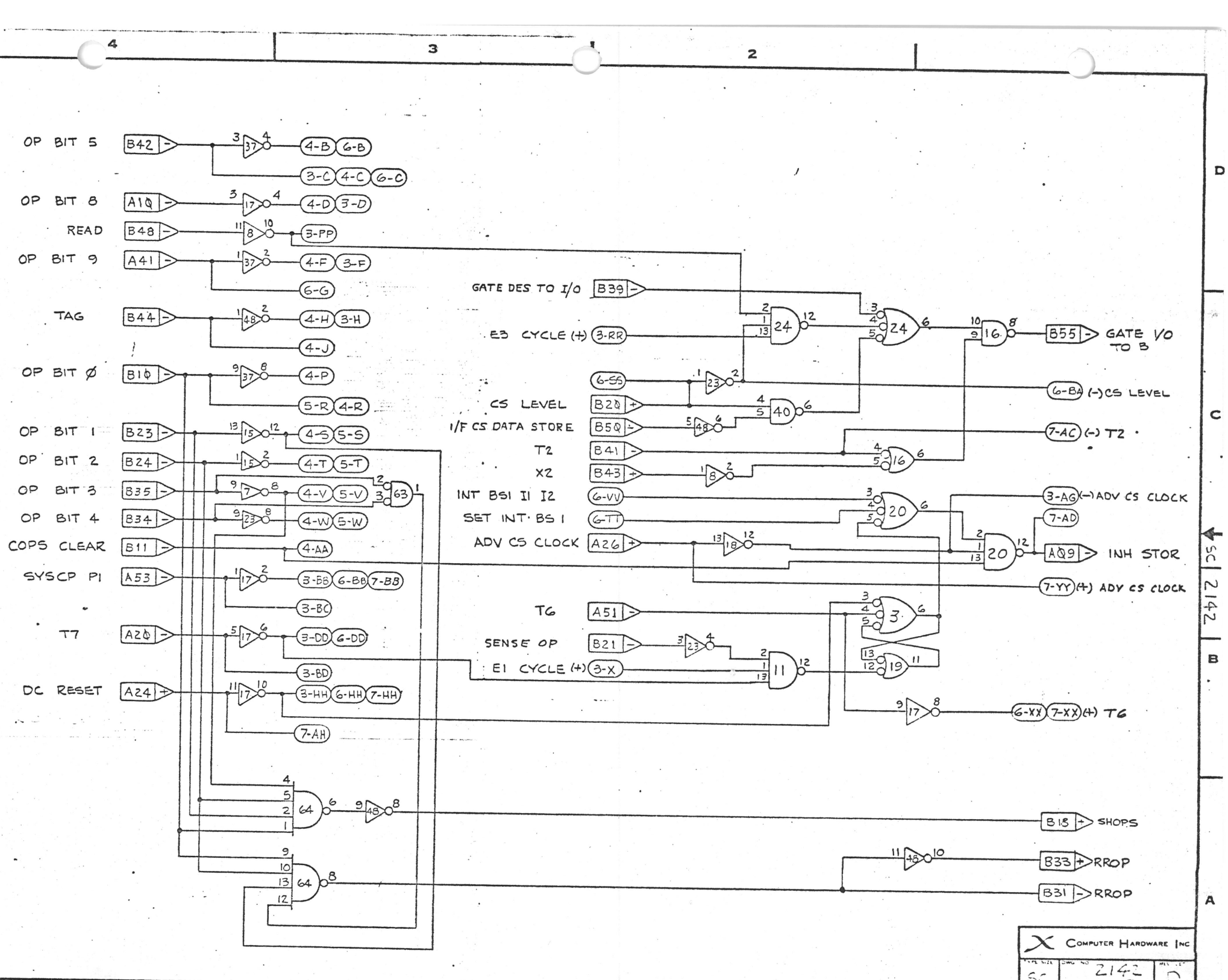
OP BIT 5
B42
4-B
6-B
3-C
4-C
6-C
OP BIT 8
A10
4-D
3-D
READ
B48
3-PP
OP BIT 9
A41
4-F
3-F
6-G
TAG
B44
4-H
3-H
4-J
OP BIT Ø
B10
4-P
5-R
4-R
OP BIT 1
B23
4-S
5-S
OP BIT 2
B24
4-T
5-T
OP BIT 3
B35
4-V
5-V
OP BIT 4
B34
4-W
5-W
COPS CLEAR
B11
4-AA
SYSCP PI
A53
3-BB
6-BB
7-BB
3-BC
T7
A20
3-DD
6-DD
3-BD
DC RESET
A24
3-HH
6-HH
7-HH
7-AH
GATE DES TO I/O
B39
E3 CYCLE (+)
3-RR
6-SS
CS LEVEL
B20
I/F CS DATA STORE
B50
T2
B41
X2
B43
INT BS1 I1 I2
6-VV
SET INT BS 1
6-TT
ADV CS CLOCK
A26
T6
A51
SENSE OP
B21
E1 CYCLE (+)
3-X
B55
GATE I/O TO B
6-BA
(-) CS LEVEL
7-AC
(-) T2
3-AG
(-) ADV CS CLOCK
7-AD
AQ9
INH STOR
7-YY
(+) ADV CS CLOCK
6-XX
7-XX
(+) T6
B18
SHOPS
B33
RROP
B31
RROP
X COMPUTER HARDWARE INC
SC
2142
D

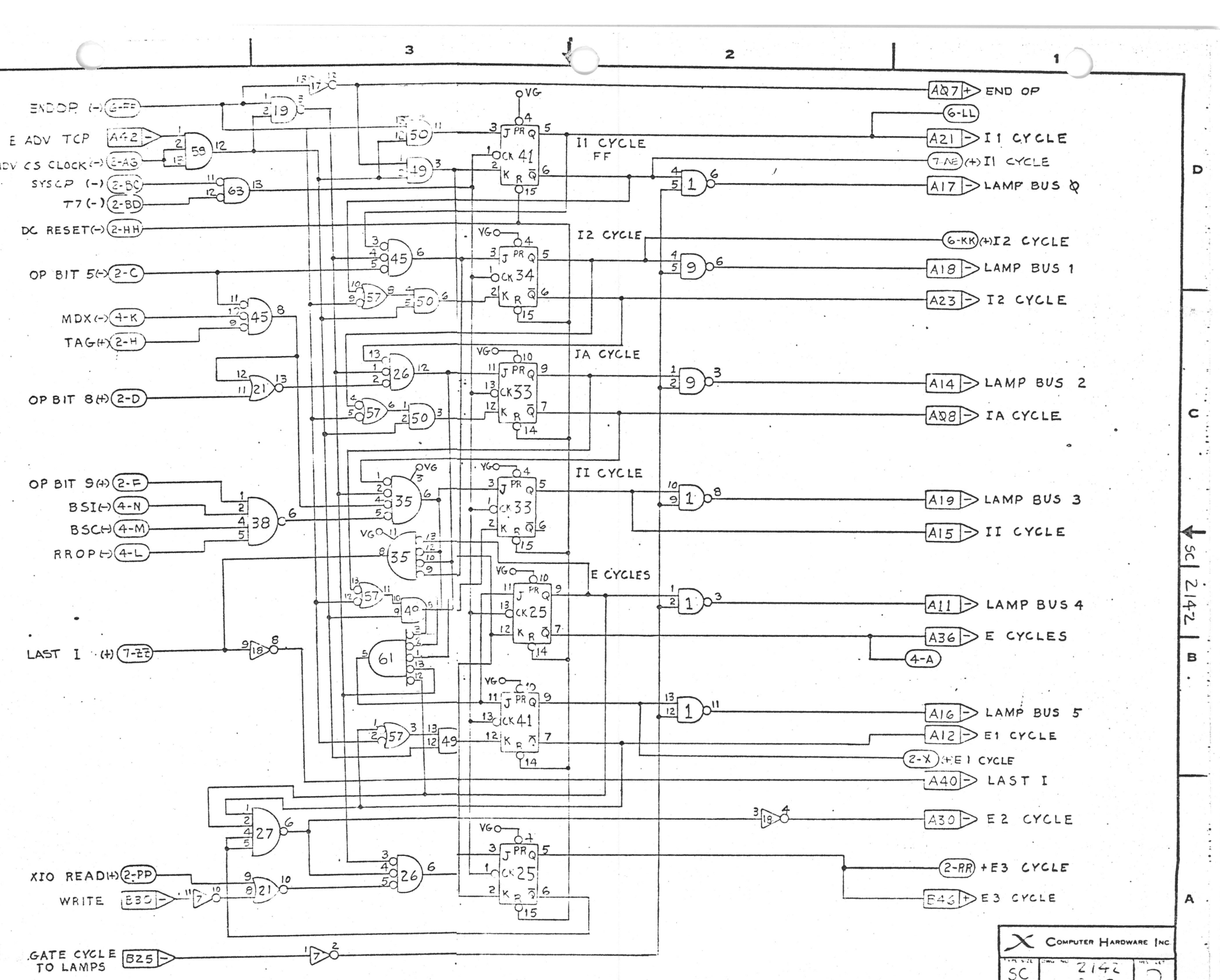
3
2
1
D
C
SC 2142
B
A
END OP (-) 6-FF
E ADV TCP (-) A42
ADV CS CLOCK (-) 3-AG
SYSCP (-) 2-BC
T7 (-) 2-BD
DC RESET (-) 2-HH
OP BIT 5 (+) 2-C
MDX (-) 4-K
TAG (+) 2-H
OP BIT 8 (+) 2-D
OP BIT 9 (+) 2-E
BSI (-) 4-N
BSC (+) 4-M
RROP (+) 4-L
LAST I (+) 7-ZZ
XIO READ (+) 2-PP
WRITE B30
GATE CYCLE TO LAMPS B25
I1 CYCLE FF
I2 CYCLE
IA CYCLE
II CYCLE
E CYCLES
A07 (+) END OP
6-LL
A21 I1 CYCLE
7-AE (+) I1 CYCLE
A17 LAMP BUS 0
6-KK (+) I2 CYCLE
A18 LAMP BUS 1
A23 I2 CYCLE
A14 LAMP BUS 2
A08 IA CYCLE
A19 LAMP BUS 3
A15 II CYCLE
A11 LAMP BUS 4
A36 E CYCLES
4-A
A16 LAMP BUS 5
A12 E1 CYCLE
2-X (+) E1 CYCLE
A40 LAST I
A30 E2 CYCLE
2-RR +E3 CYCLE
B43 (+) E3 CYCLE
COMPUTER HARDWARE INC
SC 2142

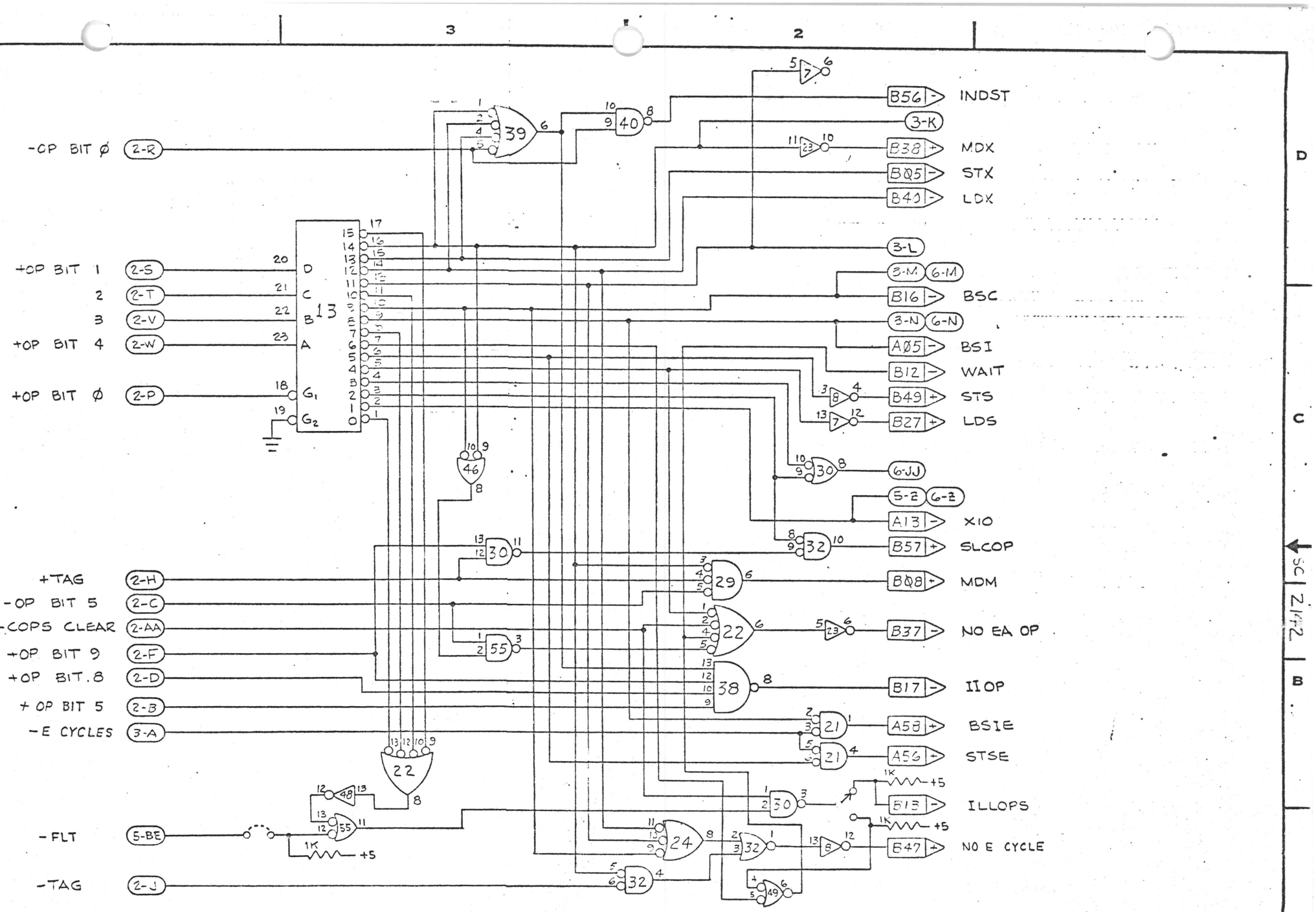

COMPUTER HARDWARE INC

SC 2142

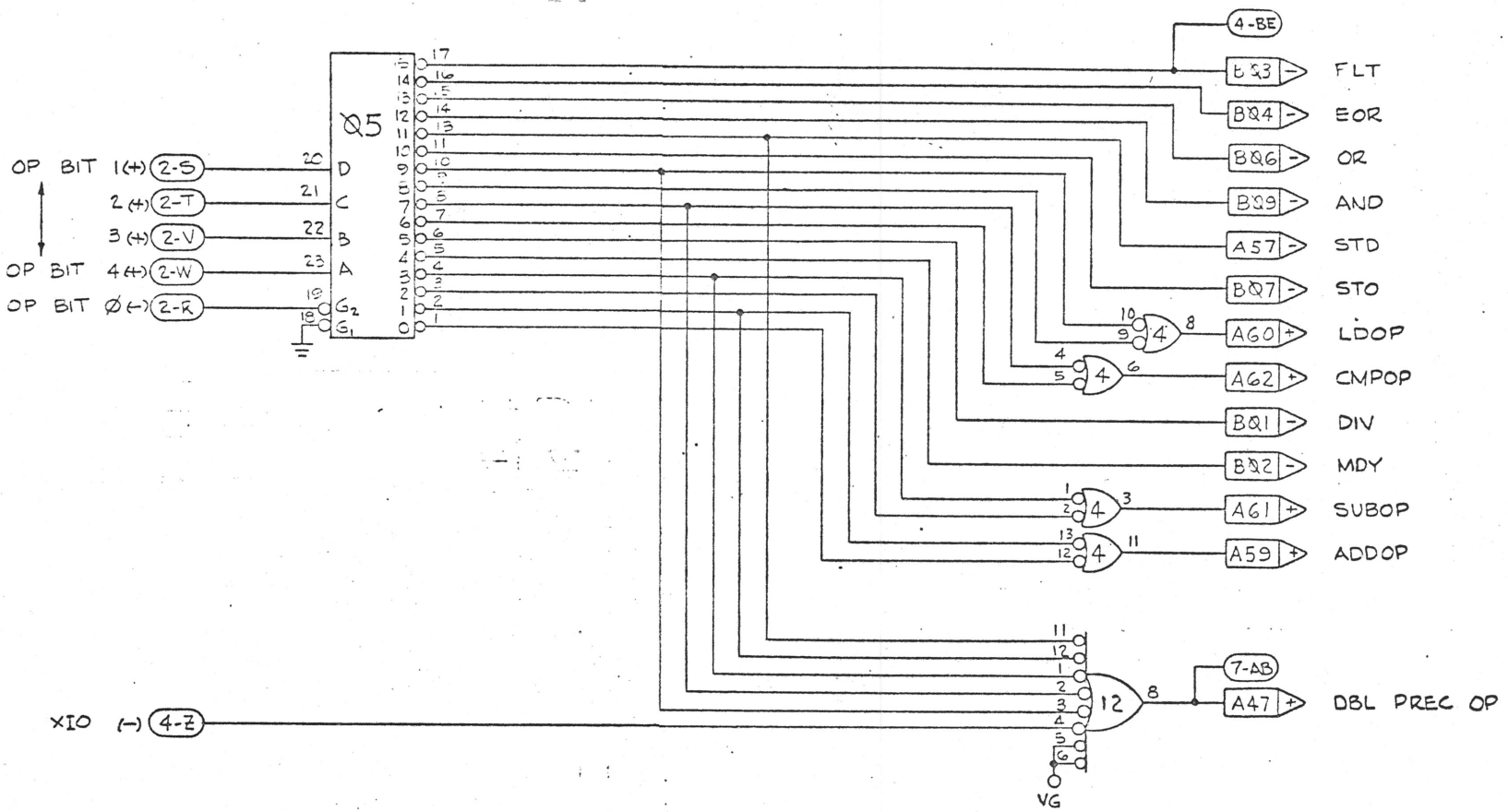

COMPUTER HARDWARE INC

2142

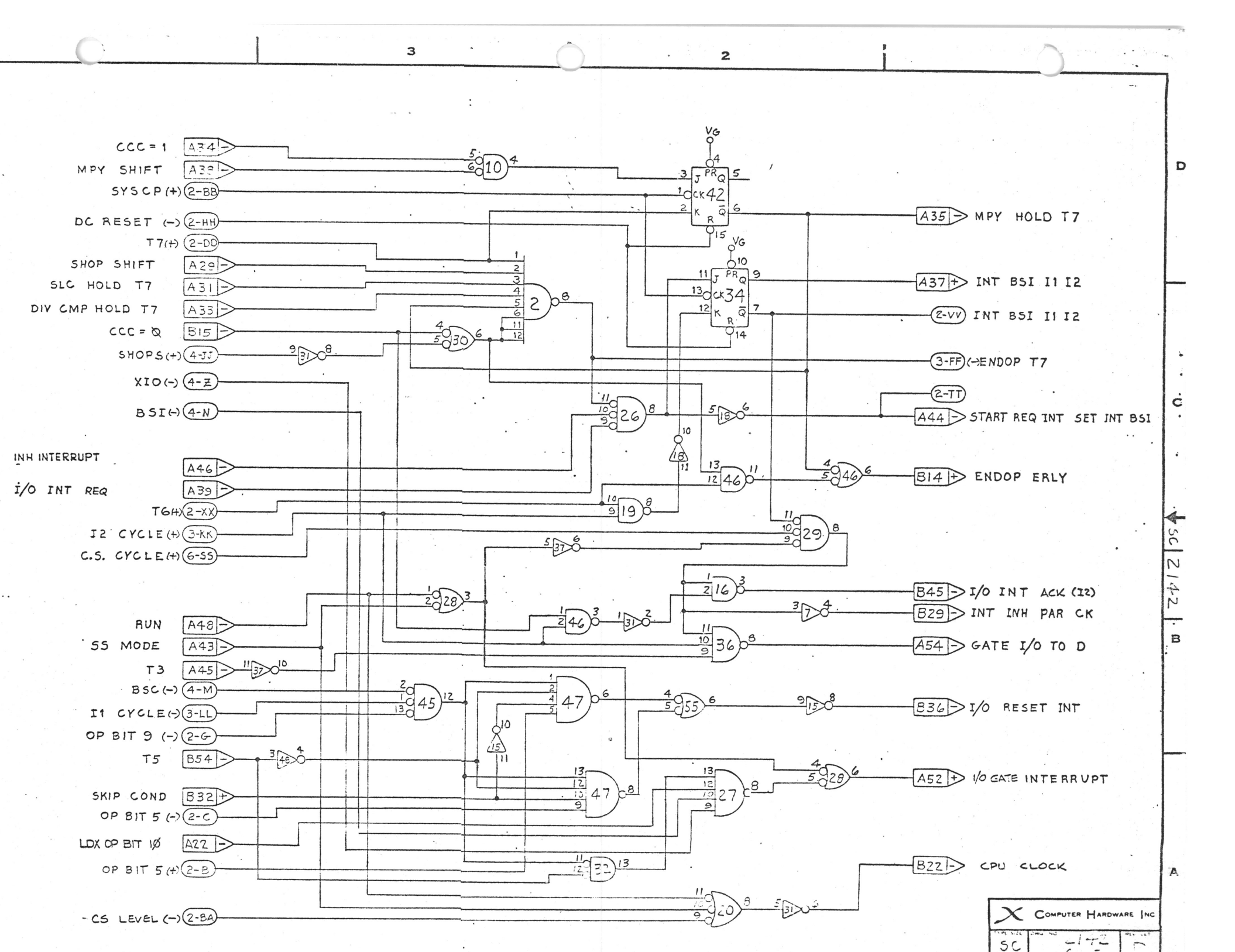
CCC = 1
MPY SHIFT
SYSCP (+)
DC RESET (−)
T7 (+)
SHOP SHIFT
SLC HOLD T7
DIV CMP HOLD T7
CCC = Ø
SHOPS (+)
XIO (−)
BSI (−)
INH INTERRUPT
I/O INT REQ
T6 (+)
I2 CYCLE (+)
C.S. CYCLE (+)
RUN
SS MODE
T3
BSC (−)
I1 CYCLE (−)
OP BIT 9 (−)
T5
SKIP COND
OP BIT 5 (−)
LDX OP BIT ØØ
OP BIT 5 (+)
CS LEVEL (−)
MPY HOLD T7
INT BSI I1 I2
INT BSI I1 I2
ENDOP T7
START REQ INT SET INT BSI
ENDOP ERLY
I/O INT ACK (I2)
INT INH PAR CK
GATE I/O TO D
I/O RESET INT
I/O GATE INTERRUPT
CPU CLOCK
COMPUTER HARDWARE INC
SC 2142 B

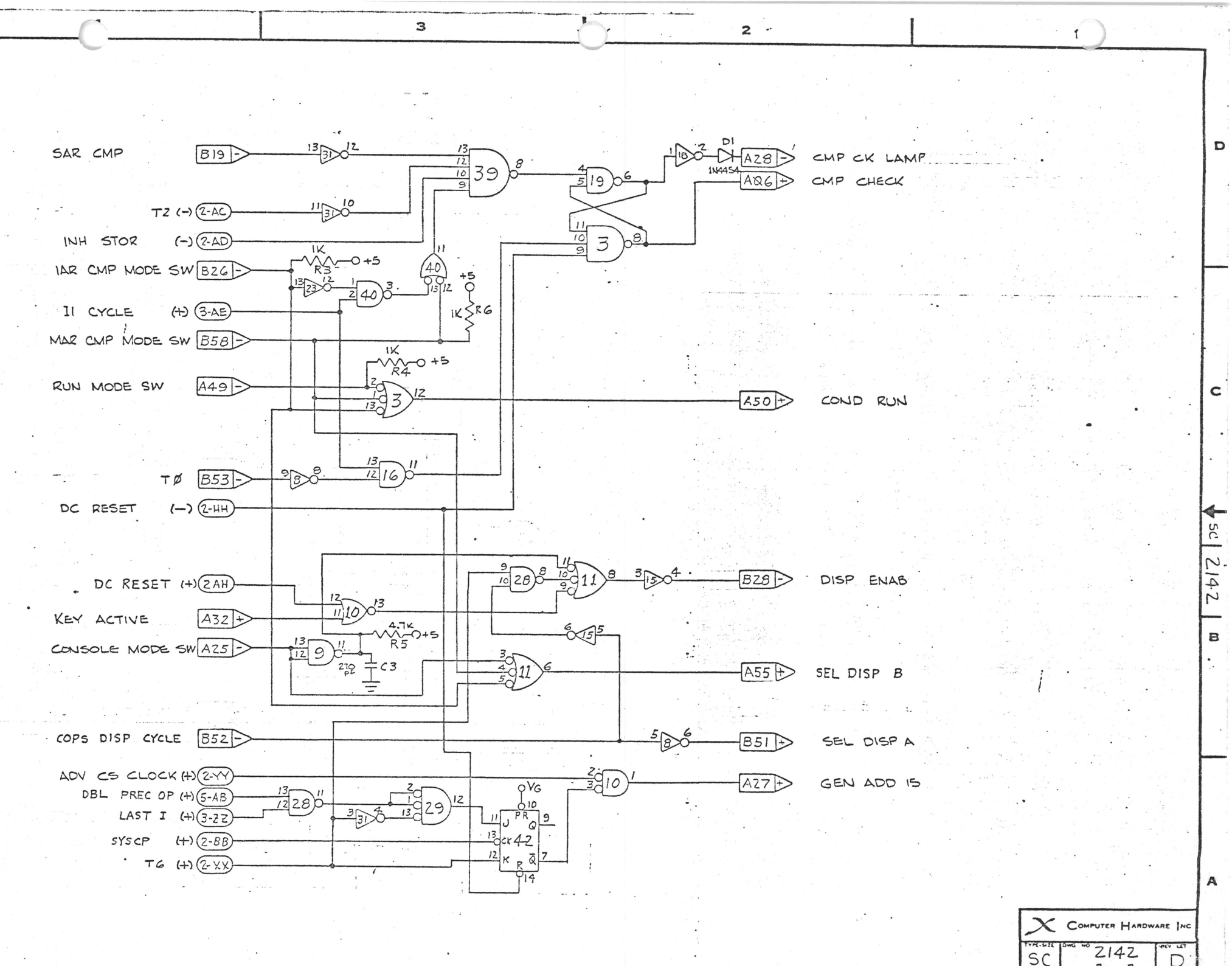

SAR CMP
B19
T2 (-) 2-AC
INH STOR (-) 2-AD
IAR CMP MODE SW B26
I1 CYCLE (+) 3-AE
MAR CMP MODE SW B58
RUN MODE SW A49
TØ B53
DC RESET (-) 2-HH
DC RESET (+) 2AH
KEY ACTIVE A32
CONSOLE MODE SW A25
COPS DISP CYCLE B52
ADV CS CLOCK (+) 2-YY
DBL PREC OP (+) 5-AB
LAST I (+) 3-ZZ
SYSCP (+) 2-BB
T6 (+) 2-XX
CMP CK LAMP A28
CMP CHECK A06
COND RUN A50
DISP ENAB B28
SEL DISP B A55
SEL DISP A B51
GEN ADD 15 A27
D1
1N4454
R3
R4
R5
R6
C3
VG
SC 2142
COMPUTER HARDWARE INC
TYPE-SIZE SC
DWG NO 2142
REV LET D

NOTES:
1- DELETED.

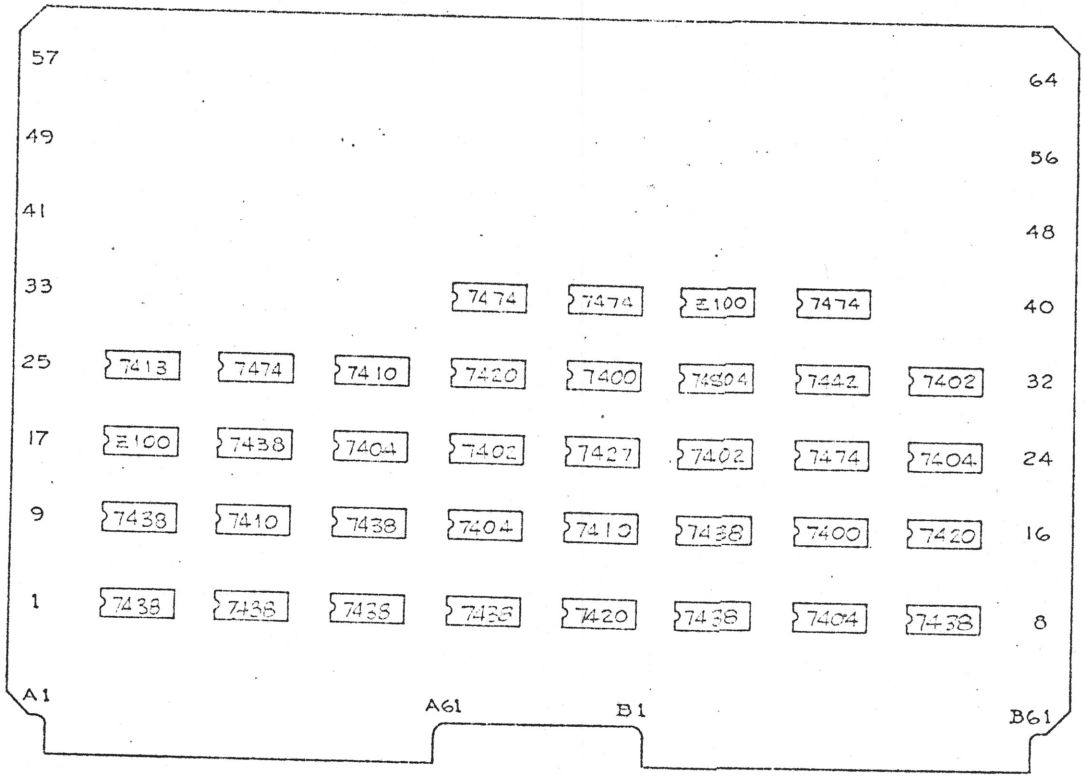

ASSEMBLY REVISION DATA (REF)

REV. LTR.	DESCRIPTION	REASON
NC1	ADDED CONFIGURATION TABLE	ESTABLISH CONFIGURATION CONTROL.
A	1. SHEET 3. IC 32 PIN 4,5,6 WAS IC 15 PIN 1,2,3. 2. SHEET 4. REMOVED IC 19 PINS 8 & 9.	TO CORRECT LOGIC ERROR IN FUNC. DECODE.
E	DELETED 'BUSY' BAAI; ADDED CAP 31 WAS A3.	INCOMPATIBLE W/ REV A PC CARD
G	ADDED WIRE FROM IC 26 PIN 8 TO IC 22 PIN 11. CUT TRACE BETWEEN IC 26-8 AND IC 22-11	CORRECT PSI ERT TIMING
H	ADDED WIRE FROM BAD TO IC 25-6 ADDED 3.3K RES	
J	ADDED 0.1 uF CAP POS CO. CIRCUIT CONTACT MOD TO IC 25 PINS	ELIMINATE TIMING MODE RESET
K	ADDED 150 pF CAP, 240Ω RES & 2 ELEMENTS OF IC 19	DELAY PULL UP TO MISC SIGNAL FROM I/O CAGE.
L	ADDED NEW FROM IC 16-8 TO IC 32-11, IC 30-10 TO IC 32-12, IC-11 TO IC 38-10, IC 32-13 TO IC 22-9	REMOVE SPURIOUS RESET SIGNAL FROM IFA.

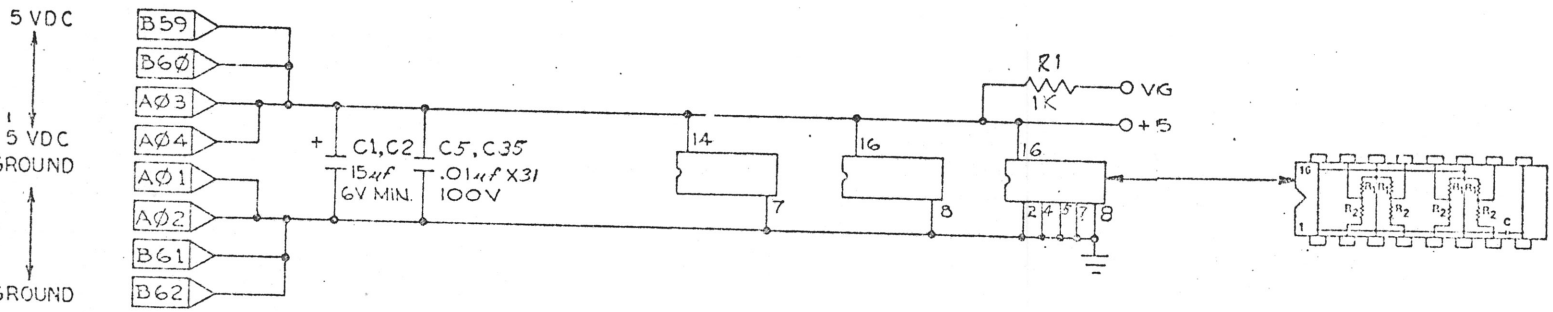

CONFIGURATION TABLE

SC-2139	REV	PC-2140	REV	AC-2141	REV
	NC		A		J
	J		A		K
	A		B		L

CONFIGURATION TABLE

SCHEMATIC	REV	PC	REV	ASSY	REV
SC-2139	NC	PC-2140	NC	AC-2141	NC
SC-2139	NC	PC-2140	NC	AC 2141	A
SC-2139	A	PC-2140	NC	AC-2141	B
SC-2139	B	PC-2140	NC	AC-2141	C
SC-2139	C	PC-2140	NC	AC-2141	D
SC-2139	D	PC-2140	A	AC-2141	E
SC-2139	E	PC-2140	B	AC-2141	F
SC-2139	F	PC-2140	C	AC-2141	G
SC-2139	G	PC-2140	D	AC-2141	H

LAST USED TABLE

CODE	REF DES.
AH	R5
	C35

FILE NUMBER

QTY. REQD	PART OR FILE NUMBER	NOMENCLATURE	MFG. PART NO OR MATERIAL	MFG. NAME OR SPECIFICATION	ITEM NO.

LIST OF MATERIALS

THIS PRINT CONTAINS PROPRIETARY INFORMATION. REPRODUCTION OF THIS PRINT OR ANY INFORMATION CONTAINED HEREIN OR MANUFACTURE OF ANY ARTICLE HEREFROM FOR DISCLOSURE TO OTHERS IS FORBIDDEN EXCEPT BY SPECIFIC WRITTEN PERMISSION FROM COMPUTER HARDWARE INC.

UNLESS OTHERWISE SPECIFIED DIMENSIONS ARE IN INCHES
DIMENSION TOLERANCES
ANGULAR DIMENSION ± 1/2°
DECIMAL 2 PLACE ±.010
DECIMAL 3 PLACE ±.005
BREAK SHARP EDGES MAX
INSIDE CORNERS MAX
ALL MACHINE SURFACES

LETTER	CHAN	NUM	DATE
A			
CHANGE MADE NC			3/71

TITLE: DRIVER, INTERFACE -2131

COMPUTER HARDWARE INC

DRAWN		CHECKED	
DESIGN			

SIZE: C | DWG NO: SC 2139 | REV: K

SCALE: | SHEET

9602

SC 2139

D C B A

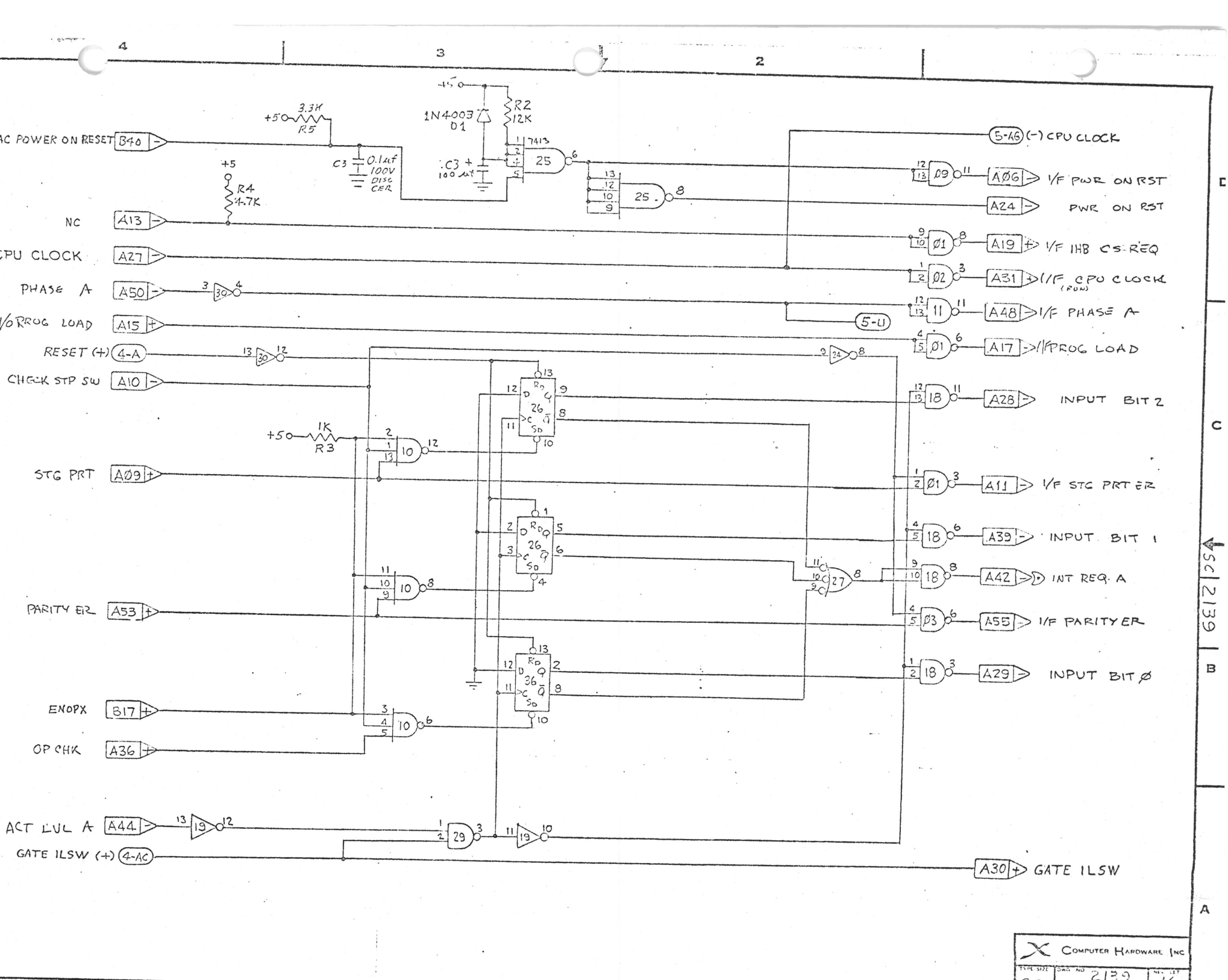
4
3
2
AC POWER ON RESET B40
+5
3.3K
R5
C3 0.1uf 100V DISC CER
+5
1N4003 D1
R2 12K
C3 + 100 uf
7413
25
25
8
+5
R4 4.7K
NC A13
CPU CLOCK A27
PHASE A A50
I/O PROG LOAD A15
RESET (+) 4-A
CHECK STP SW A10
+5
1K R3
STG PRT A09
PARITY ER A53
ENOPX B17
OP CHK A36
ACT LVL A A44
GATE ILSW (+) 4-AC
5-AG (-) CPU CLOCK
A09 A06 I/F PWR ON RST
A24 PWR ON RST
A01 A19 I/F INH CS REQ
A02 A31 I/F CPU CLOCK (RUN)
A11 A48 I/F PHASE A
5-U
A01 A17 I/F PROG LOAD
A18 A28 INPUT BIT 2
A01 A11 I/F STG PRT ER
A18 A39 INPUT BIT 1
A18 A42 INT REQ A
A03 A55 I/F PARITY ER
A18 A29 INPUT BIT 0
A30 GATE ILSW
D
C
B
A
SC 2139
Computer Hardware Inc
SIZE
DWG NO 2139
REV LET

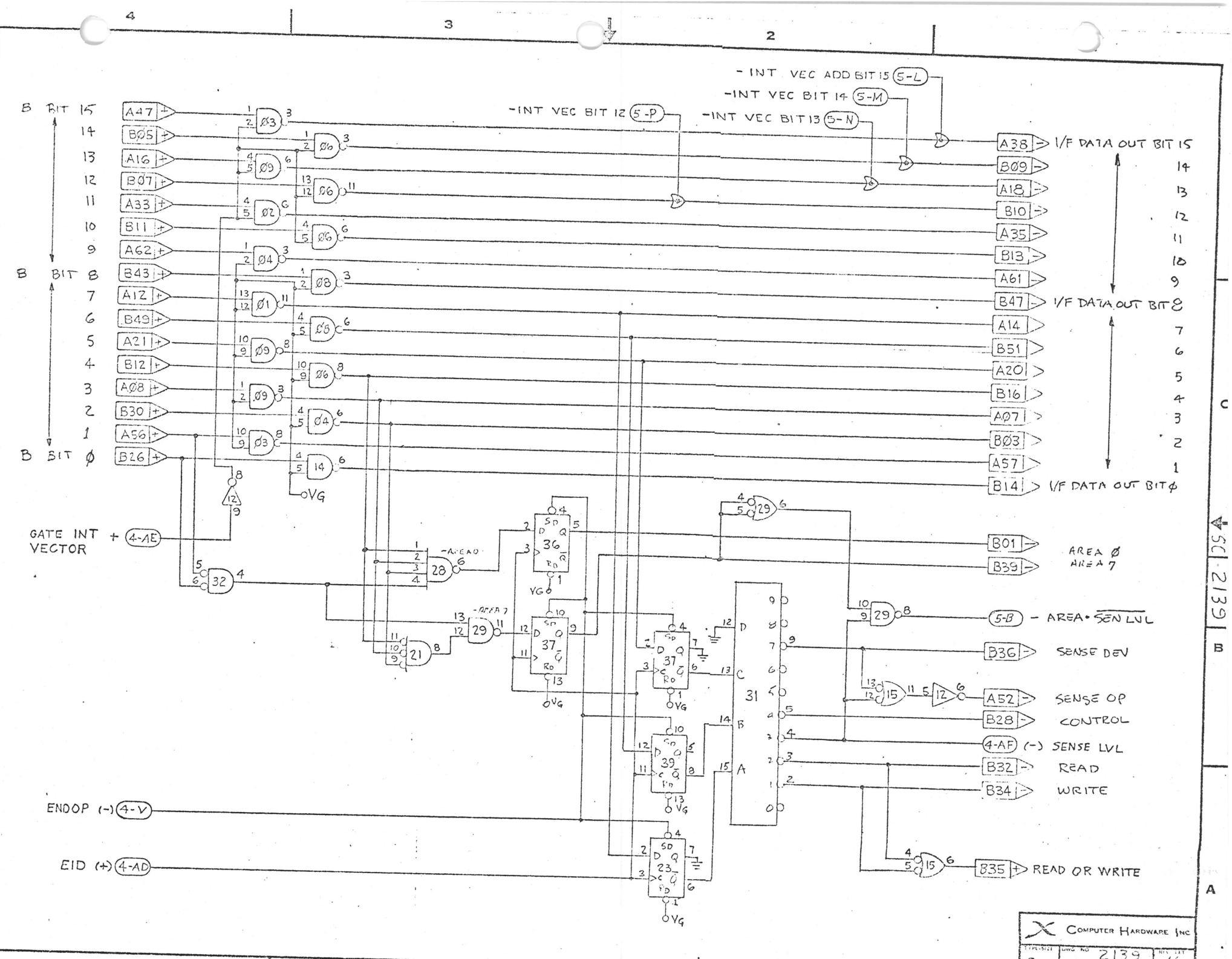

-INT VEC ADD BIT 15 (5-L)
-INT VEC BIT 14 (5-M)
-INT VEC BIT 12 (5-P)
-INT VEC BIT 13 (5-N)
B BIT 15
B BIT 8
B BIT Ø
A47
BØ5
A16
BØ7
A33
B11
A62
B43
A12
B49
A21
B12
AØ8
B30
A56
B26
A38
BØ9
A18
B10
A35
B13
A61
B47
A14
B51
A20
B16
AØ7
BØ3
A57
B14
I/F DATA OUT BIT 15
I/F DATA OUT BIT 8
I/F DATA OUT BIT Ø
GATE INT VECTOR + (4-AE)
-AREA 0
-AREA 7
VG
B01
B39
AREA Ø
AREA 7
(5-B) - AREA • SEN LVL
B36
SENSE DEV
A52
SENSE OP
B28
CONTROL
(4-AF) (-) SENSE LVL
B32
READ
B34
WRITE
ENDOP (-) (4-V)
EID (+) (4-AD)
B35
READ OR WRITE
COMPUTER HARDWARE INC
DWG NO 2139
SC 2139

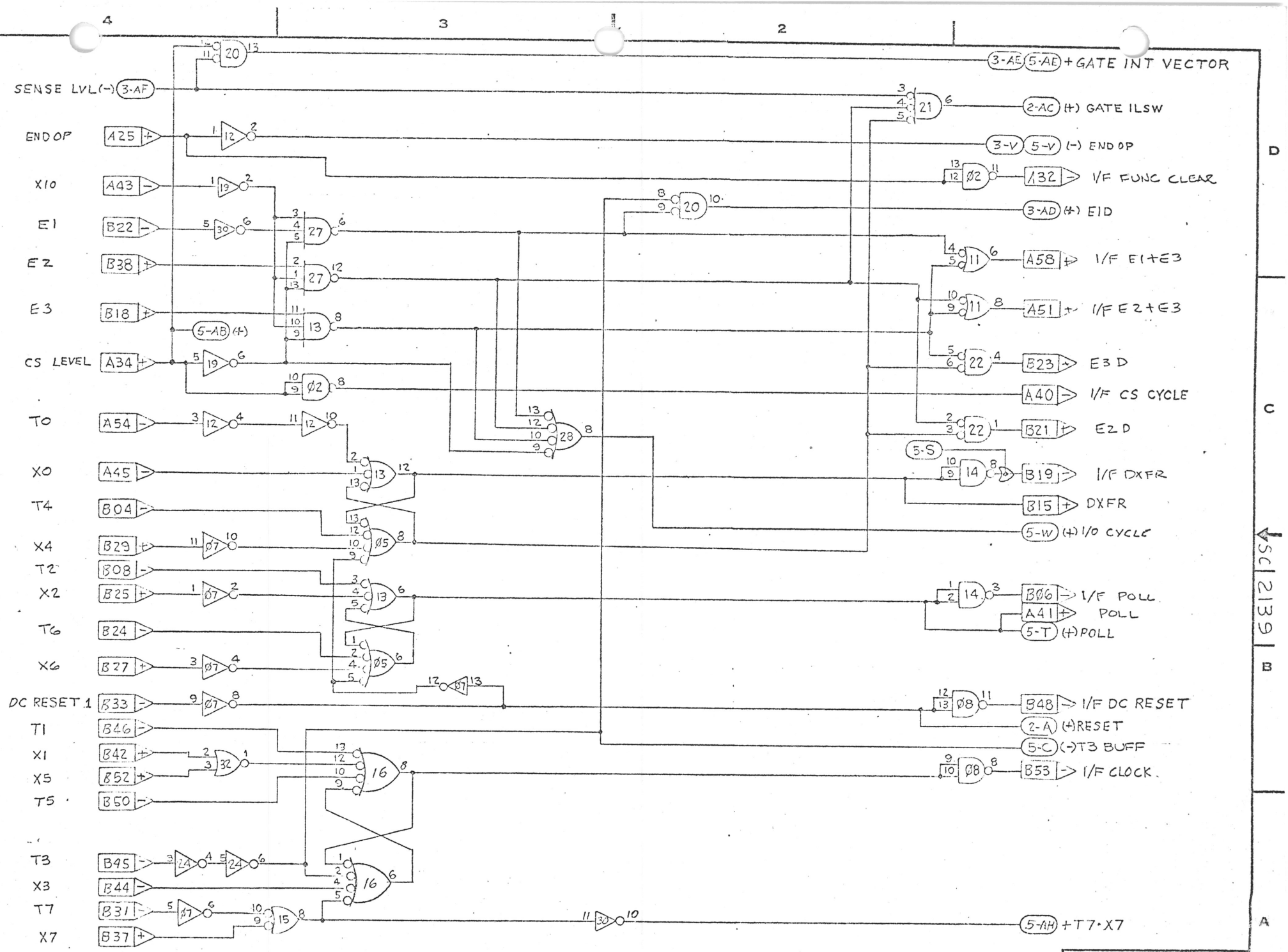

COMPUTER HARDWARE INC

SYM. SIZE	DWG NO	REV. LET
SC	2139	M

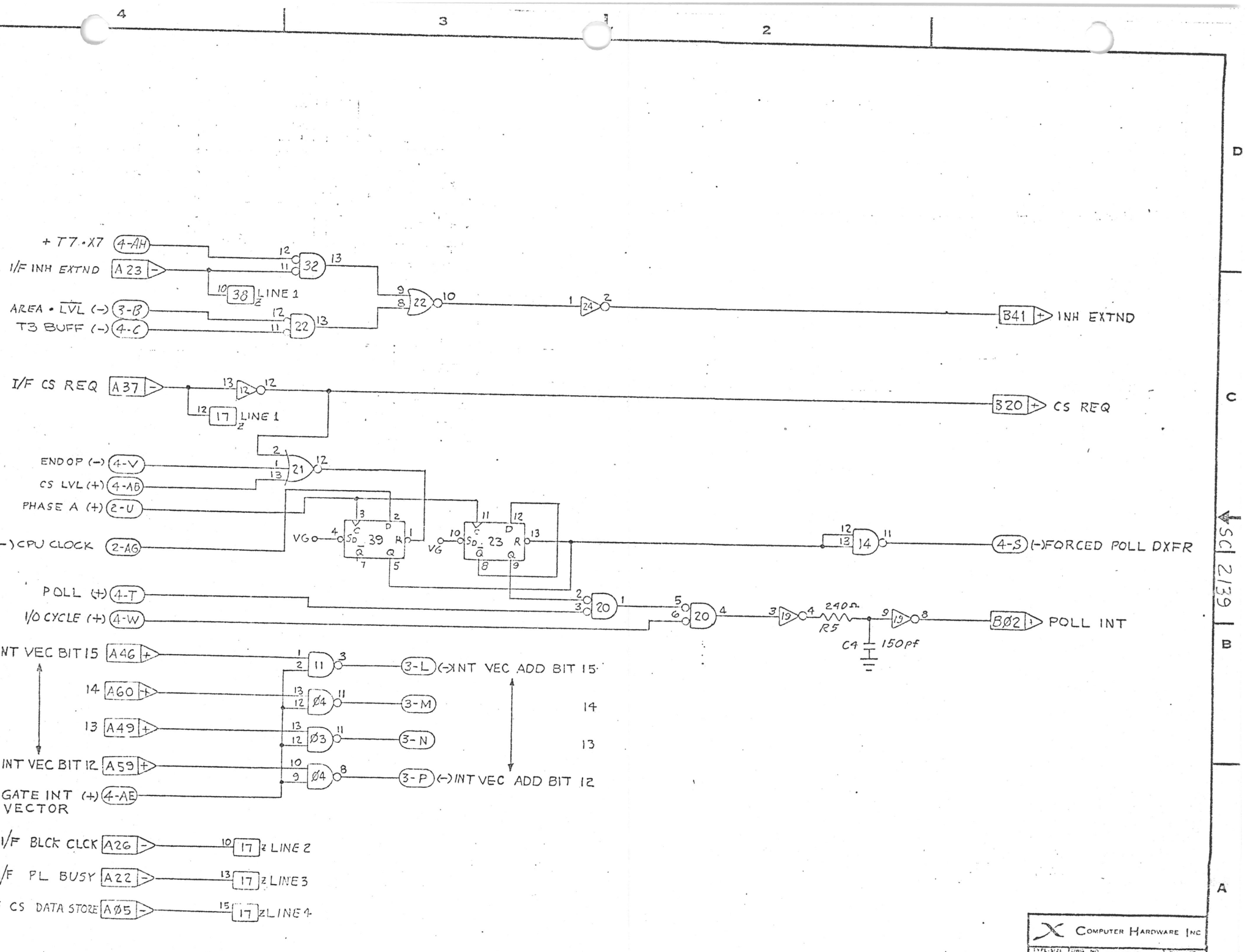
+ T7 • X7 4-AH
I/F INH EXTND A23
AREA • LVL (-) 3-B
T3 BUFF (-) 4-C
38 LINE 1
B41 INH EXTND
I/F CS REQ A37
17 LINE 1
B20 CS REQ
END OP (-) 4-V
CS LVL (+) 4-AB
PHASE A (+) 2-U
(-) CPU CLOCK 2-AG
VG
39
23
4-S (-) FORCED POLL DXFR
POLL (+) 4-T
I/O CYCLE (+) 4-W
240Ω R5
C4 150pf
B02 POLL INT
INT VEC BIT 15 A46
14 A60
13 A49
INT VEC BIT 12 A59
GATE INT VECTOR 4-AE
3-L (←) INT VEC ADD BIT 15
3-M 14
3-N 13
3-P (←) INT VEC ADD BIT 12
I/F BLCK CLCK A26
I/F PL BUSY A22
CS DATA STORE A05
17 LINE 2
17 LINE 3
17 LINE 4
COMPUTER HARDWARE INC
SC
2139
REV